Better Homes and Gardens®

WOOD®

THE WORLD'S LEADING WOODWORKING MAGAZINE

DECEMBER 1995 • ISSUE NO. 84
Please display until December 11

Holiday Gift Spectacular

22 pages of projects beginning on page 60

You could win a DODGE RAM PICKUP
See details on page 92*

$4.95 U.S.

12

0 14005 14072 2

10 SHOP-SMART JIGS
See page 50

*No Purchase Necessary.
This magazine also available at libraries.

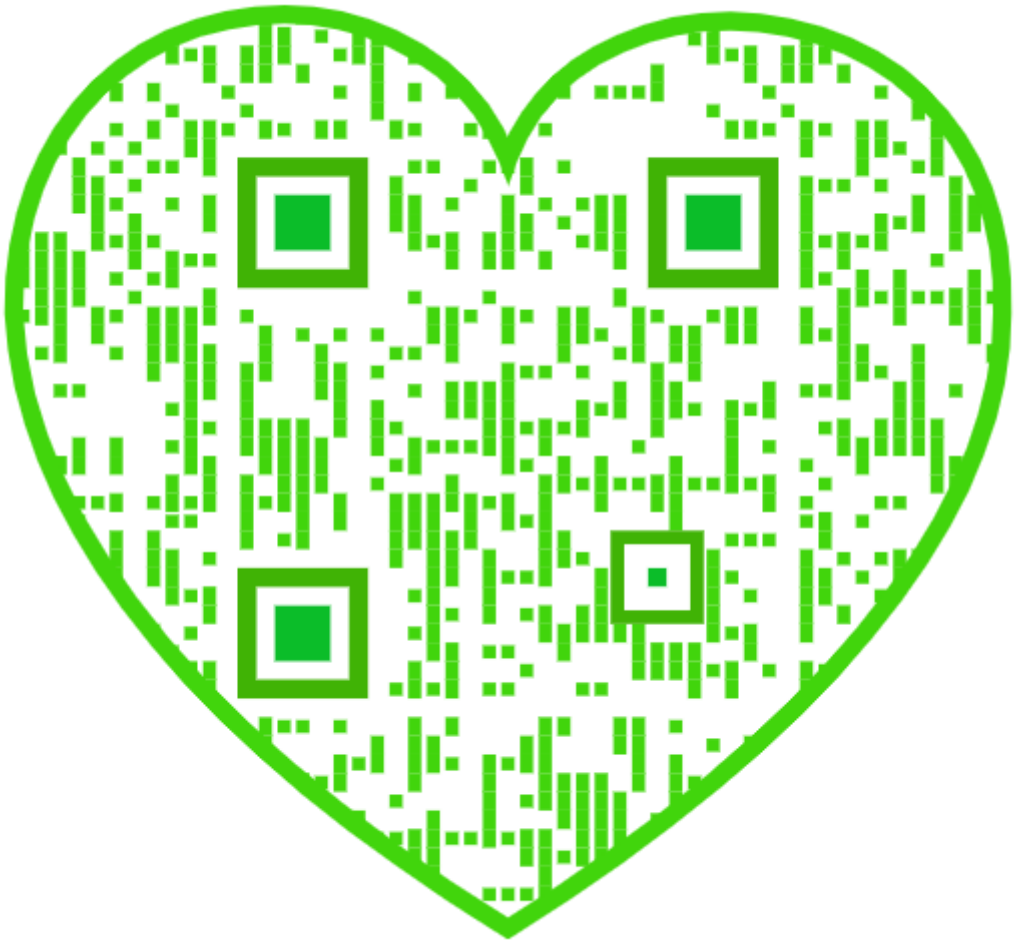

The Grizzly Top 12

IMPORTS, INC.

16" BANDSAW

MODEL G1073

- 1½ HP, 110/220V single-phase motor
- 3 blade speeds: 1900, 2400, 2900 FPM
- Cast-iron table is 17" x 17", tilts 10°L, 45°R
- Includes ½" blade
- Heavy-duty rip fence
- Built-in dust collection port
- Shipping weight approx. 450 lbs.

REG. $550 SALE $525.00

10" HEAVY-DUTY TABLE SAW

MODEL G1022

- 1½ HP, 110/220V motor
- 2 cast-iron wings
- Precision-ground cast-iron table top with T-slots
- Table size with extension wings 41" x 27"
- Shipping weight approx. 270 lbs.

REG. $375 SALE $345.00

10" TILTING ARBOR SUPER HEAVY-DUTY TABLE SAW

MODEL G1023

- 3 HP, 220V single-phase motor
- Precision-ground solid cast-iron table and wings
- Steel miter gauge
- Magnetic switch
- Shipping weight approx. 425 lbs.

REG. $795 SALE $750.00

12" PLANER

MODEL G1017

- 2 HP, 110V motor
- Dual-knife cutterhead
- Stock capacity: 12" wide x 5½" thick
- Optional dust hood available
- Complete with instruction manual
- Shipping weight approx. 90 lbs.

Comes with FREE EXTRA SET of KNIVES!

ONLY $395.00

15" PLANER

MODEL G1021

- 2 HP, 220V single-phase motor
- 2 feed speeds
- Stock capacity: 15" wide x 6" thick
- Automatic infeed and outfeed rollers are chain-driven
- Cast-iron table is 15" x 20" with 15" extensions each side
- Shipping weight approx. 475 lbs.

Comes with FREE STAND!

ONLY $765.00

20" PLANER

MODEL G1033

- 3 HP, 220V single-phase motor
- 2-speed automatic feed
- Stock capacity: 20" wide x 8" thick
- Anti-kickback fingers prevent board from backing up
- Precision-ground cast-iron table measures 26" x 20"
- Shipping weight approx. 800 lbs.

ONLY $1195.00

OSCILLATING SPINDLE SANDER

NEW

MODEL G1071

- Heavy-duty 1 HP, 110/220V motor
- Cast-iron 24" x 24" table tilts to 45°
- Ten spindle sizes: ¼", ⅜", ½", ⅝", ¾", 1", 1½", 2", 3", 4"
- Built-in dust collection port
- Shipping weight approx. 345 lbs.

INTRO PRICE $495.00

COMBINATION SANDER 6" x 48" BELT / 9" DISC

MODEL G1014

- ¾ HP, single phase motor
- Quick belt-release lever
- Heavy-duty steel stand
- Features shielded bearings
- Table tilts to 45°
- Shipping weight approx. 120 lbs.

REG. $195 SALE $179.00

16" DRUM SANDER

NEW

MODEL G1079

- 1½ HP, 220V single-phase motor
- Separate ¼ HP belt feed motor
- Dual belt-driven sanding drums
- Heavy-duty steel cabinet
- Built-in dust collection ports
- Shipping weight approx. 325 lbs.

INTRO PRICE $795.00

6" x 47" HEAVY-DUTY JOINTER

MODEL G1182

- 1 HP, 110/220V motor
- Cabinet-type stand
- Longest bed (47") of all jointers in its class
- Heavy-duty center-mounted fence
- Shipping weight approx. 250 lbs.

REG. $375 SALE $355.00

1½ HP SHAPER

MODEL G1035

- 1½ HP, 110/220V motor
- Two interchangeable spindles: ½" & ¾"
- 20" x 18" precision-ground, cast-iron table
- Dual speed, reversing motor
- Two independently adjustable 2½" x 10" fences
- Shipping weight approx. 225 lbs.

ONLY $395.00

2 HP DUST COLLECTOR

MODEL G1029

With 10' of FREE HOSE!

- 2 HP, 220V single phase motor
- Handles two machines easily
- Suction capacity: 1182 cfm
- Complete with instruction manual
- Shipping weight approx. 140 lbs.

REG. $275 SALE $255.00

44695658

Dedicated to QUALITY, VALUE, and SERVICE!

Call now for your FREE 1995 Catalog!

Grizzly IMPORTS, INC.

Importers of Fine Machinery

VISA MasterCard DISCOVER NOVUS

ALL MACHINES ABOVE ARE F.O.B. BELLINGHAM, WA OR WILLIAMSPORT, PA

Circle No. 860

EAST 2406 REACH RD., WILLIAMSPORT, PA 17701

1-800-523-4777

CUSTOMER SERVICE: (717)326-3806 FAX: (800)438-5901

WEST P.O BOX 2069, BELLINGHAM, WA 98227

1-800-541-5537

CUSTOMER SERVICE: (360)647-0801 FAX: (800)225-0021

Better Homes and Gardens®
WOOD®
THE WORLD'S LEADING WOODWORKING MAGAZINE®

DECEMBER 1995 • Vol. 12, No. 9 • Issue No. 84

Publishing Director MAX RUNCIMAN

Editor LARRY CLAYTON
Managing Editor JIM HARROLD
Art Director C. L. GATZKE
Design Editor JAMES R. DOWNING
Senior Editor/Features PETER J. STEPHANO
Senior Editor/How-To MARLEN KEMMET
Assistant Managing Editor/Products BILL KRIER
Senior Editor/Special-Interest LARRY JOHNSTON
General-Interest Editor TOM JACKSON
Associate Art Director PERRY A. McFARLIN
Assistant Design Editor/Project Builder JAN HALE SVEC
Project Builder CHARLES I. HEDLUND
Production/Office Manager DARLENE REYNOLDS
Graphic Designer CHERYL A. CIBULA
Administrative Assistant MARGARET CLOSNER
Art Business Office Secretary NATALIE COOLEY
Correspondence Writer DON MOSTROM
Contributing Editors KIM DOWNING, DAVE HENDERSON, LORNA JOHNSON, ROXANNE LeMOINE, BOB McFARLIN

Publisher WILLIAM R. REED
Director, Marketing/Advertising CHRISTOPHER W. SCHRAFT
Western Advertising Manager JON BOOK
Eastern Advertising Manager JAMES N. FORD
Direct Response Marketing JANA WEDDELL, LISA WIEMKEN
Marketing Manager RICK PALLISTER
Marketing/Advertising Services Supervisor PAT HENDERSHOTT
Administrative Assistants KATHY GARLAND, SHERYL MUNYON
ADVERTISING OFFICE: 1912 Grand Avenue, Des Moines, IA 50309-3379. Phone 515/284-2235
CLASSIFIED ADVERTISING INFORMATION: Call Jeff Provol at 800/424-3090.

Circulation Director SUSAN SIDLER
Associate Circulation Director KATHI PRIEN
Business Manager JANET NELSON
Senior Product Manager RICK GROW

Meredith Publishing Group
President CHRISTOPHER M. LITTLE
Custom Marketing BILL MURPHY; Controller MAX RUNCIMAN; Circulation HAL ORINGER; Operations DEAN PIETERS

Meredith CORPORATION
Chairman and Chief Executive Officer JACK D. REHM
President and Chief Operating Officer WILLIAM T. KERR

Chairman of the Executive Committee E. T. MEREDITH III

Better Homes and Gardens® WOOD® magazine (ISSN-0743-894X) is published nine times a year in January, February, April, June, August, September, October, November, and December by Meredith Corporation, 1716 Locust St., Des Moines, IA 50309-3023. Second-class postage paid at Des Moines, Iowa, and additional mailing offices. Better Homes and Gardens trademark registered in Canada and Australia. Marca Registrada en México. **ONE-YEAR SUBSCRIPTION PRICES:** U.S. and its possessions $24.97; Canada, $34; other countries, $43. ©COPYRIGHT MEREDITH CORPORATION 1995. ALL RIGHTS RESERVED. Canadian GST Reg. #R123482887.

CUSTOMER SERVICE INFORMATION: For service on your magazine subscription, including change of address, write to **Better Homes and Gardens *WOOD* Magazine**, P.O. Box 55050, Boulder, CO 80322-5050. Please enclose your address label from a recent issue. Or, phone toll-free **800/374-9663.**

Address letters and questions to **THE EDITOR, *WOOD* Magazine,** 1912 Grand Avenue, Des Moines, IA 50309-3379.

ABC membership applied for.

PRINTED IN U.S.A.

THE EDITOR'S ANGLE

WE'RE WORKING HARD TO SERVE YOU BETTER

Have you ever wondered how we decide what articles to include in *WOOD®* magazine? Actually, several things enter into the equation.

First and foremost, we pay close attention to what you have to say. When you stop by our offices for a visit, when you write, and when we run into each other at woodworking shows, we're always taking mental notes.

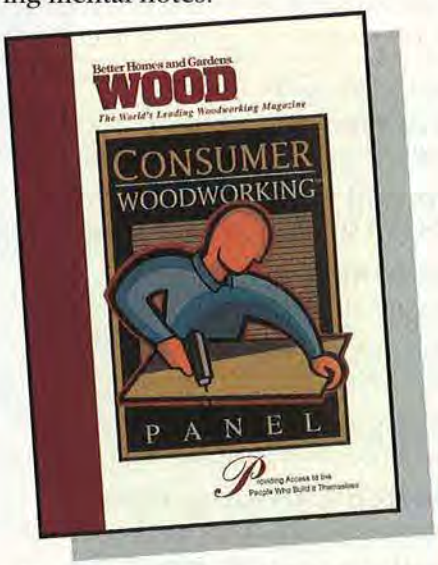

We also do in-magazine and randomly mailed questionnaires. Through these, we learn about your habits as a woodworker and about your interest level in articles found in the magazine.

And lastly, we rely on our experience as woodworkers to guide what we include. We figure, for example, that if a project, technique, or tool category interests a majority of us, chances are good that you'll benefit from it, too.

This past summer, we began what we hope will be yet another way to measure your interests—this time in upcoming articles. It's called the *WOOD* magazine Consumer Woodworking Panel. Five hundred of you have been selected as a representative sample of the readership.

During the coming year, the panel members will tell us, among other things, how interested they are in various projects, techniques, tools, and other articles that we plan to include in upcoming issues. If we find out that something we plan to feature doesn't strike the fancy of the panel, we'll pull it from the lineup. By doing this, we will be able to give you more of what you want.

You say you're not a panel member, but you have something to say? Don't be shy. Write to:

The Editor
***WOOD* Magazine**
1912 Grand Avenue
Des Moines, IA
50309-3379

Tell me what's on your mind. I'd like to hear from you.

Could you use a brand-new pickup?

If you're like most woodworkers I know, you could easily find 101 reasons for owning a pickup truck. Good news—here's your chance to win one! Just fill out the entry form on *page 92*, and you may win a Dodge Ram 1500 SLT that's loaded with products from DeWalt, Ryobi, Delta, Franklin, and American Tool. Good luck to everyone who enters.

Larry Clayton

Print this article

Better Homes and Gardens®
WOOD®
ISSUE NO. 84 DECEMBER 1995
THE WORLD'S LEADING WOODWORKING MAGAZINE

Page 37

Page 50

CONTENTS

37 The Maine course
See how a custom woodworker plies his trade.

42 Jointer safety
Use these tips for accident-free tool operation.

44 Jointers under $1,000
Choose the tool, features, and price that best suit your woodworking needs.

50 10 scrapwood jigs
Add convenience and accuracy to your woodworking with the handy ideas found here.

56 Wood veneer
Travel to a mill in Iowa and see the fascinating process for slicing wood veneers from logs.

Page 68

Page 70

Page 60

Spectacular Gift Section

60 Wise men and camels
Scrollsaw a set of easy-to-assemble Nativity figures.

62 Arts and Crafts mantle clock
Fashion a stylish tabletop timepiece from oak.

68 Purse mirror
Turn this stocking stuffer for someone special.

70 Land-loving yacht
Please a child at Christmas with this pull toy.

72 Putting-on-airs potpourri box
Build a project that makes a lot of scents.

74 Tabletop Christmas trees
Celebrate the holiday with these candleholders.

76 Scrollsaw melody CD rack
Create shelftop storage for your favorite tunes.

78 Sprite on skis
Carve a legendary snow-loving gnome.

82 Craftsman-style shelf
Accent our wall shelf with square buttons.

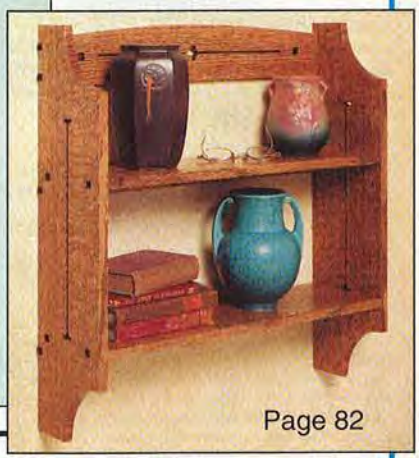

Page 82

SHORT-SUBJECT FEATURES

1 The Editor's Angle
4 Develop Your Shop Skills
8 What Woodworkers Need To Know
14 Tips From Your Shop (And Ours)
24 Great Ideas From Our Shop
28 Talking Back
32 Products That Perform
98 Yesterday's Tools
100 Sprite On Skis (Cont'd)
104 Finishing Touches

This issue's cover wood grain: bubinga

How To Leave A Subtle Hint.

To get a great gift you have to give a subtle hint. Nothing too conspicuous, mind you. Just a small reminder strategically placed on the refrigerator. Or the car dashboard. Or the bathroom sink. A little something to remind the ones you love about the gift you'd love to get.

After all, how are they supposed to know you want QUICK-GRIP® clamps if you don't tell them? That's exactly why we've included these handy clip-and-post coupons for your convenience. It's the only way to make 100-percent certain you'll get QUICK-GRIP clamps.

QUICK-GRIP clamps are great gifts for anyone who uses tools. Whether you're into woodworking, hobbies, models, car repair or just general maintenance around the house, QUICK-GRIP clamps are the perfect companions for anyone who needs an extra hand.

In fact, there are QUICK-GRIP clamps for almost any job. So the next time someone asks what kind of present you'd like to receive, make it easy. Leave a note and tell 'em you want QUICK-GRIP clamps. Then when you get 'em — don't forget to act surprised!

QUICK-GRIP®
A UNIT OF AMERICAN TOOL COMPANIES, INC.

© 1995 AMERICAN TOOL COMPANIES, INC.

GREAT GIFT IDEA

QUICK-GRIP®
Bar Clamps
THE ONE HANDER™

The revolutionary bar clamp that redefined the concept of clamping.

GREAT GIFT IDEA

QUICK-GRIP®
Mini Bar Clamps

With the same great features as the QUICK-GRIP® Bar Clamp, but in a smaller, handier size.

GREAT GIFT IDEA

QUICK-GRIP®
Spring Clamps

The more you use these versatile clamps, the more uses you'll find for them.

GREAT GIFT IDEA

PowerPress™
Pipe Clamps

Adjusts for any size woodworking job and fits both threaded and unthreaded pipe. Reverses to a spreader.

POINTERS FOR HANGING YOUR PROJECTS

These tips will ensure your success

Like most woodworkers, you probably enjoy building projects more than hanging them on a wall. But, the hanging chores usually go hand in hand with the creation of the project. The following are some surefire pointers that will make this task go smoothly for you.

1 Before you do anything, take note of the weight of the object that you're about to hang. In the case of shelves and cabinets, include in your total the weight of the objects that you will place on or in them.

Of course, it's always best to drive the hanging fastener into a wall stud, but the absence of a wall stud shouldn't prevent you from hanging most objects weighing less than 50 pounds. For example, with most objects up to three pounds, you can usually pound a nail into most any area of a wall and be done with it.

For objects up to 10 pounds, a picture hanger like the one in drawing A *below* works well. You can use versions of these designed for objects weighing over 10 pounds, but make sure the nail goes into a wall stud.

For objects weighing up to 30 pounds, you also can choose from a wide variety of hollow-wall anchors. For walls made of gypsum panels (drywall) at least ½" thick, we prefer the self-tapping, threaded, metal or plastic versions like the one shown in drawing B *below*. You simply drive these into the wall with a Phillips bit, then drive a screw into them.

If your house has lath-and-plaster walls, you'll need to drill a hole and insert an expanding-type bolt such as the one in drawing C *below*. Because of the strength of the lath boards, such a fastener should support up to 50 pounds.

When driving fasteners into a stud, remember that screws provide considerably more holding power than nails. And, screws with coarse threads have more "bite" than ones with fine threads.

Note: *For more information on hardware for hanging projects, see pages 9 and 10 of the April 1995 issue of* WOOD® *magazine.*

2 Once you've determined the weight of the hanging object, also consider the direction that it exerts pressure on the wall fasteners. As shown *below*, "flat" projects such as mirrors and picture frames exert straight-downward pressure on a fastener. On the other hand, cabinets and shelves exert both downward *and* outward pressure on a wall fastener.

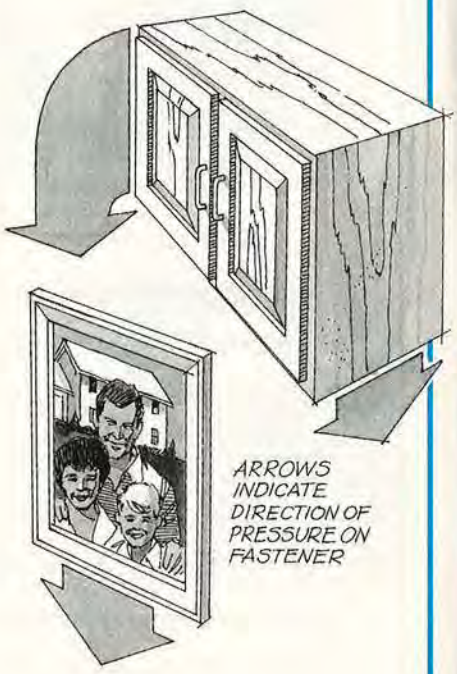

Picture hangers work fine on objects that exert downward pressure only. But, projects that protrude out from a wall are another matter. Since these objects tend to pull the fastener out of the wall, you should drive the fastener into the wall stud. If

Continued on page 6

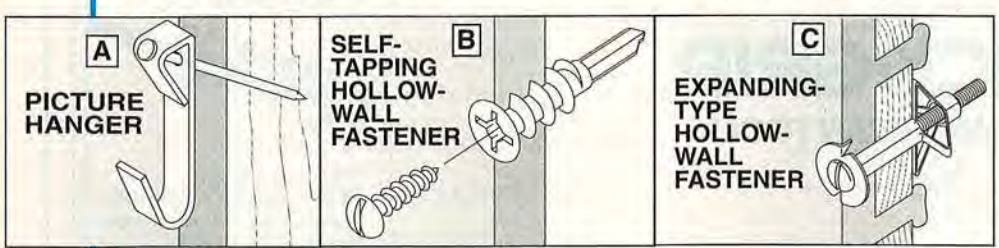

TROPHY CASE

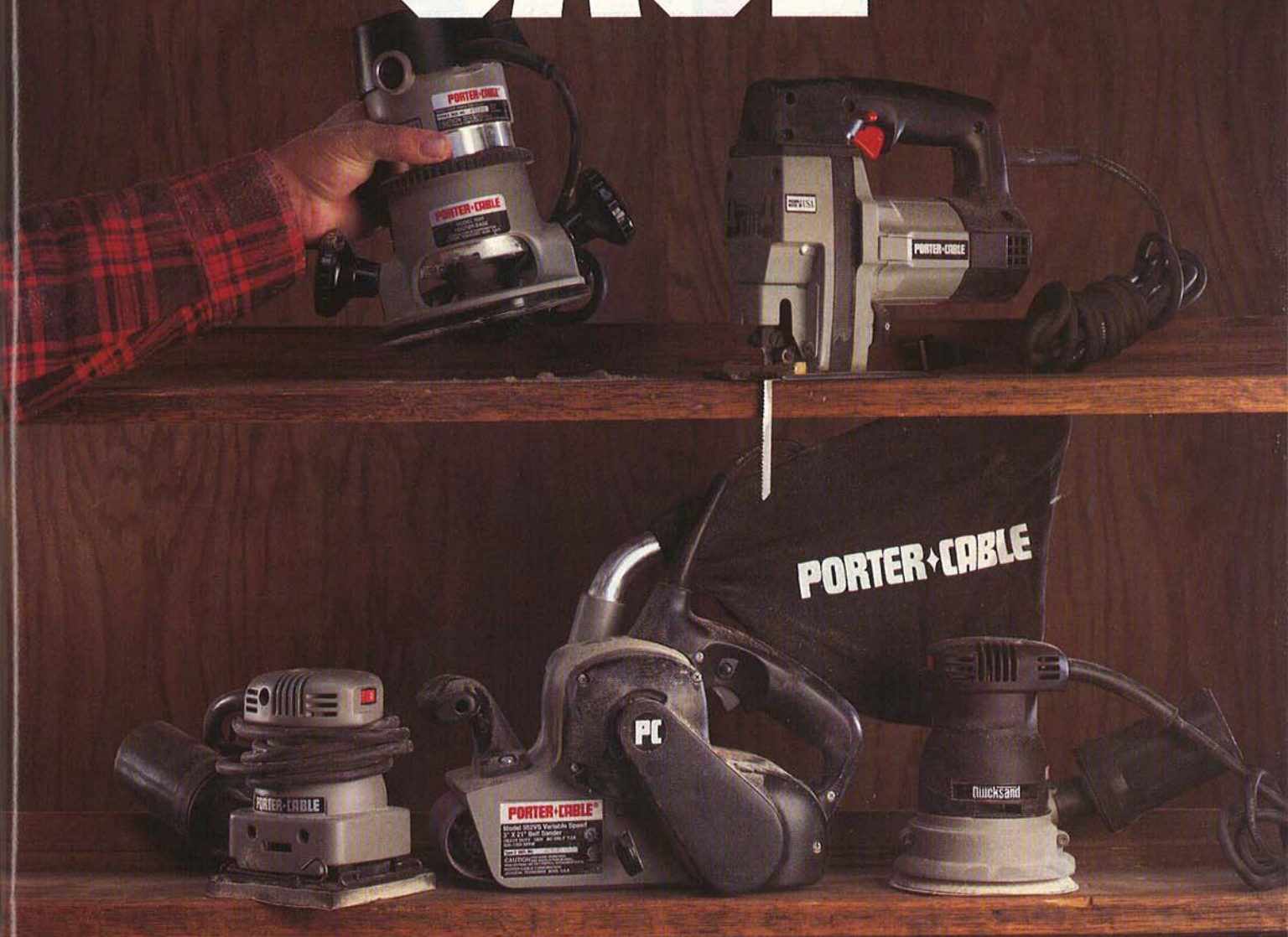

For more rewarding work, line the walls of your shop with Porter-Cable power tools. They are every serious woodworker's most prized possession. To learn more about the number one tools in woodworking, visit your nearest Porter-Cable distributor, hardware store or home center. Or call 1-800-487-8665 (in Canada:519-836-2840).

Porter-Cable is proud to be a co-underwriter of The New Yankee Workshop and The American Woodshop on public television.

PORTER-CABLE

The Woodworker's Choice™

MADE IN AMERICA WITH PRIDE

©1995 Porter-Cable Corporation

Continued from page 4

POINTERS FOR HANGING YOUR PROJECTS

that's not possible, use an expanding-type hollow-wall fastener. Since these spread the outward pressure over a larger area of the wall, it's unlikely that the fastener will pull out.

With projects less than 16" wide you may find that you can place one fastener into a stud, but not the other. This usually isn't a problem with lighter clocks and shelving, provided you use an expanding-type fastener to hold the project tightly against the hollow part of the wall.

3 Rather than mark the locations of the fasteners directly onto the wall, we mark the locations on "sticky notes" adhered to the wall. These notes keep your wall mark-free, and you can remove them without fear of lifting off paint.

Here's an example of how to use these with a picture frame requiring two fasteners. First, hold the frame in its approximate location and have a helper place a sticky note behind one of the top corners of the frame. The helper can then mark the exact location of the corner onto the sticky note.

Next, measure the back of the frame for the placement of the fasteners. Note the distance between the fastener location and the top of the frame, the distance between the fastener and the edge of the frame, and the distance between the two fastener locations.

Now, use the marked corner of the frame as a reference for marking the height of one fastener onto a sticky note. Mark the height of the other fastener onto another sticky note, using a level as shown *left*. Then, mark the exact location of the fasteners by drawing vertical lines through the lines already marked. Finally, drive the fastener through the sticky note as shown *below*, and tear away the sticky note.

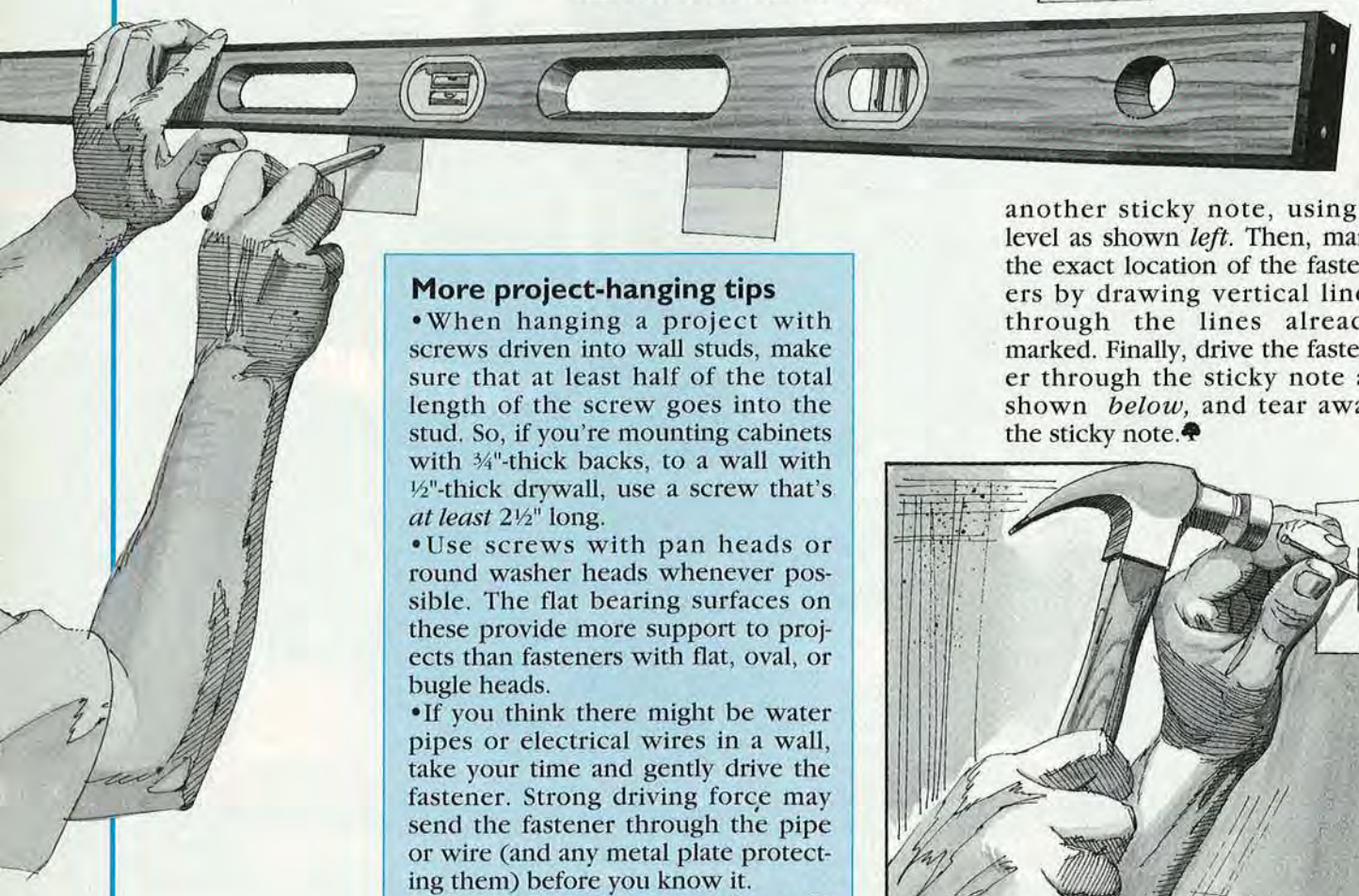

More project-hanging tips

- When hanging a project with screws driven into wall studs, make sure that at least half of the total length of the screw goes into the stud. So, if you're mounting cabinets with ¾"-thick backs, to a wall with ½"-thick drywall, use a screw that's *at least* 2½" long.
- Use screws with pan heads or round washer heads whenever possible. The flat bearing surfaces on these provide more support to projects than fasteners with flat, oval, or bugle heads.
- If you think there might be water pipes or electrical wires in a wall, take your time and gently drive the fastener. Strong driving force may send the fastener through the pipe or wire (and any metal plate protecting them) before you know it.
- Check the thickness of a wall before driving a fastener into it. Some nonbearing walls may be 2"-or-less thick, and you might drive a fastener through to the other side.

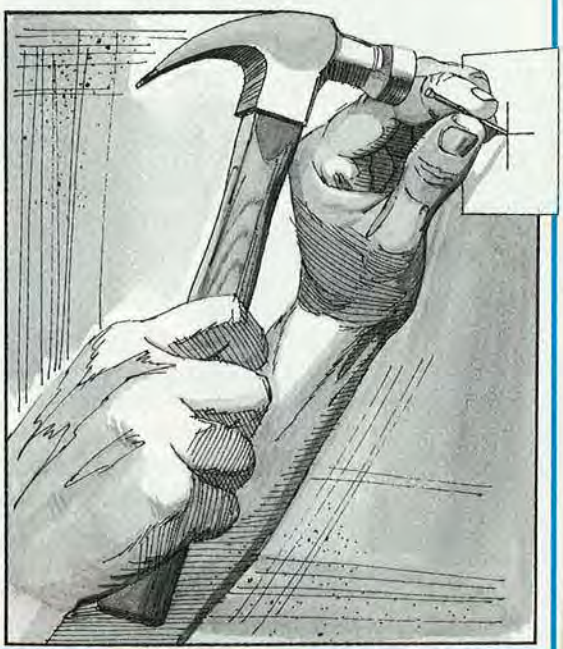

Written by Bill Krier with Chuck Hedlund Illustrations: Jim Stevenson

"CALLING ALL WOODWORKERS!"

JET rebates up to $100

when you buy our most popular woodworking tools, backed by JET's impressive 2-year warranty.

See your local JET dealer today!

Offer effective Oct. 1, 1995 through Feb. 28, 1996.

JWBS 14CS Closed Stand Bandsaw

JWBS 14OS Open Stand Bandsaw

$25 Rebate

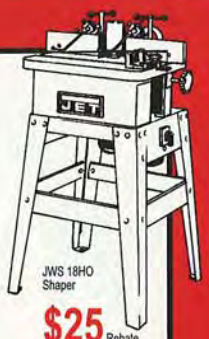

JWS 18HO Shaper

$25 Rebate

JWP 15HO Planer

$100 Rebate

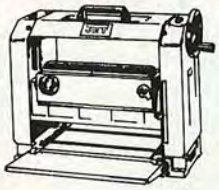

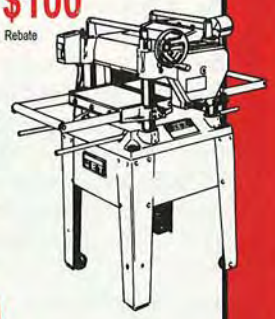

JWP 12 Planer

$30 Rebate

JPM 13 Planer/Molder

$50 Rebate

NEW!

DC 1200 Dust Collector

$25 Rebate

DC 650 Dust Collector

$20 Rebate

JWL 1236 Woodworking Lathe

$30 Rebate

JJ 6CS Jointer

$30 Rebate

JCS 10/JWCS 10JF Tablesaw

$75 Rebate

NEW!

JDP 17MF Drill Press

$30 Rebate

JTS 10/JWTS 10JF Tablesaw

$35 Rebate

JET

EQUIPMENT & TOOLS

For the name of your local JET dealer, call **1-800-274-6848**.

Auburn, WA

What woodworkers need to know

Aging copper for the Arts and Crafts look

Copper almost seems to be a metal made for woodworkers. Its warm, rich color complements wood rather than fighting with it for our attention. And, copper, one of the first metals used by man, works easily.

These virtues gave copper widespread popularity during the Arts and Crafts movement early in this century. Arts and Crafts homes and furnishings, which stressed the beauty of natural materials and handwork, often combined copper and wood.

So, when we researched the clock project on *page 62*, we decided that the shiny, new copper on the face needed an aged look, as shown *right*. After some experimenting, we came up with a simple way to give copper that been-around-awhile look for projects in the Arts and Crafts style.

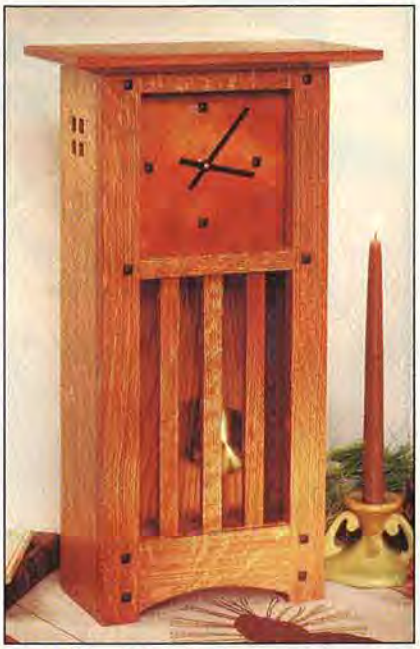

With the copper secured in a vise, smooth the edge by drawing a file along the edge.

Working with copper

Many crafts-supply stores sell copper sheets for handcrafting, or you can buy it from a metals dealer. Copper comes in scores of alloys, though, so tell the dealer you want a soft, malleable one that you can work by hand.

Mark your cutting lines on copper with a scratch awl or other scriber. Pencil marks don't show up well on metal, and markers usually make lines too wide for accurate work.

Use a straightedge with nonskid backing. (If you don't have one, put a strip of double-faced tape on the back of a ruler. Press it against your shirt sleeve a couple of times to reduce the tape's tack before starting the layout.) Scribe curved lines against a French curve or template, similarly skid-proofed. For complex layouts, adhere the pattern directly to the metal with spray adhesive.

Copper cuts easily. Common tin snips will readily handle straight cuts and gentle curves in sheet copper about 1/32" thick or less. As you cut, don't close the snips all the way. Doing so crimps the metal's edge every time the jaw tips come together. Instead, keep the snips moving forward so the cutting takes place mostly at the back of the jaws.

You also can cut this soft, nonferrous metal with a scrollsaw, bandsaw, or portable jigsaw (sabersaw). Back the metal with scrapwood at least 1/4" thick for power sawing.

A no. 5 blade (.038×.015" with 16 teeth per inch) works fine for a few quick scrollsaw cuts. For serious copper sawing, go with a metal-piercing blade (24–48 teeth per inch), and lubricate it with beeswax. If you have a variable-speed saw, run it at a slow speed for metal cutting.

For the bandsaw or jigsaw, select a general-purpose or metal-cutting blade with 14 or more teeth per inch. If you're using the jigsaw, clamp the workpiece securely to the workbench, the cutting line overhanging the edge. Cover the saw's baseplate with masking tape to prevent scratching the copper.

Smooth and true cut edges by filing. For best results, clamp the metal between two pieces of scrapwood in a vise. Stand the metal's edge about 1/16" above the wood as shown *above right*, and draw a mill-cut bastard file along the edge.

Lay out and drill any required holes before finishing the metal. This way, you won't risk marring the finished surface.

Continued on page 10

The Great Rebate. It's back.

Limited Time Offer

$30 Rebate!

For a limited time only, Freud is offering incredible rebates on their best selling power tools. $30 in Biscuit Joiners, or get a Free Edge Guide (list $29.90) **and** a $20 rebate on our professional router! This offer is valid through Freud participating dealers.
Freud machines are built though, for professional use. These are their features:

FT2000E Plunge Router

$20 Rebate plus a Free Edge Guide!

- 3 1/4 HP heavy duty motor.
- Constant RPM electronics.
- Soft start.
- Shaft lock.
- Plunge depth max 2 3/4".
- Variable speed control 8,000 to 22,000 RPM.
- 1 1/2" shank collet with 1/4" shank adaptor.
- Micro adjustment for depth.
- New plunge depth scale.
- 3 position depth turrett (for multiple passes.)
- Depth lock lever.
- Limited time only: Edge Guide with Micro Adjustment.

JS100 Biscuit Joiner

- 5 Amp heavy duty motor.
- 6-wing carbide blade with safety shoulder design.
- Dust collection with bag, vacuum ready.
- Reinforced aluminum fence with 2 positions: 45° or 90°.
- New depth adjustment for 00, 10, 20, A, B size biscuits.
- Machined aluminum base.
- Non-marring rubber positioning pins.
- Fence scale with inches and metric.

JS102 Biscuit Joiner

Same as JS100 except:

- Aluminum adjustable fence for operation 0° to 90°.

*Rebates available only on Freud JS100, JS102 and Freud FT2000E purchased from participating dealers between September 1, 1995 and March 31, 1996.

Furniture Courtesy of Marshall-James

freud®

Precisely What You Need.

For the name of your participating dealer or full details on the rebate call **800-472-7307.**

Circle No. 1321

What woodworkers need to know

Aging copper for the Arts and Crafts look

Continued from page 8

Giving copper the old look

Over the years craftsmen have used various treatments to give new copper an old look. One old method, still employed by some artisans today, involves bathing the copper in a solution made by dissolving chunks of liver of sulfur (potassium sulfide) in water. But this process poses a hazard.

"Potassium sulfide hydrolyzes in water, releasing hydrogen sulfide (H_2S), a gas as toxic as the hydrogen cyanide used in a gas chamber," warns Dr. Jim Lindberg, professor of chemistry at Drake University. "Without adequate ventilation, it will kill you," the chemist says.

The thought that aging copper this way might suddenly stop our own aging led us to try some other methods. In tests, we achieved best results with another chemical—rapid fixer, a common photographic material. Camera shops usually sell rapid fixer, or you can check the Yellow Pages for photographic-supply retailers. (We bought a 16-ounce bottle of Ilford Universal Rapid Fixer. Kodak and others market a similar product.)

Cleaning the copper is the first order of business. To remove oils and dirt, scrub both sides with kitchen cleanser. Rinse well.

Then, sand the exposed face to a satin sheen, using a fine (red) Scotchbrite pad followed by an ultrafine (gray) one. Don't make fingerprints on the copper—wear gloves or hold the piece with clean rags. (We wore latex medical gloves throughout the operation and handled the copper by the edges.) Wash off the sanding residue (we swabbed it off with denatured alcohol).

Dilute the rapid fixer 1:2 with water. To do this, pour a measured amount of fixer into a clean two-liter pop bottle (or similar suitable container), then add twice that amount of water. Stir or shake to mix.

Pour about 1" of dilute fixer into a suitable glass or plastic tray. (We bought a plastic photo-developing tray for $3.95 at the camera store where we bought the rapid fixer.) Slip the copper face-up into the chemical. Rock the tray gently to keep the solution moving across the copper's surface, as shown *below*.

Gently rock the tray from side to side and end to end while aging copper in photographic rapid fixer.

After a few minutes, the surface will begin to darken. Continue agitating until the copper takes on roughly the color of cinnamon. (Reaching this final shade can take 10 minutes or so.) Don't let the color get too dark—that hides the copper look.

Rinse both sides under running water, then stand the piece on edge to air dry. You can help it along with a hair dryer or heat gun, but don't rub the surface. After the copper dries, check the color. If you've hit one you like, spray on clear gloss lacquer or acrylic coating.

You can reimmerse the metal to darken it. To lighten it, though, you'll have to sand to bright metal and start over again.

Written by Larry Johnston
Photographs: John Hetherington

The Best Handmade Presents Start With CRAFTSMAN.

Craftsman 10" Benchtop Table Saw $179.99 Value!
- Motor develops maximum 2-1/2 HP.
- Self-aligning rip fence.
- Built-in sawdust collection port.

$159.99

Craftsman 16 Gallon Wet/Dry Vac Cleans Up Fast!
- Powerful 5.0 horsepower
- Three nozzles included.

$99.99

Craftsman Oscillating Spindle Sander, Perfect For Curves!
- Spindle turns 1,725 r.p.m. while moving up and down.
- Perfect companion tool for a scroll saw. Sands a variety of curves.

$149.99

CRAFTSMAN
Only at Sears and Sears Hardware Stores.

Prices may vary in Alaska, Hawaii, and Puerto Rico
© 1995 Sears Roebuck and Company

Rip Fence Technology at its Best

Craftsman's New EXACT-I-RIP Fence and 10" Table Saw

Exact-I-Rip Advantage #1: You get plenty of room to rip even your biggest work pieces–up to 24" on the left side and 30" on the right!

Deluxe miter gauge has positive stops at 90° and 45°. Includes hold down clamp for more precise crosscutting.

Thin kerf carbide-tipped blade stays sharper longer than a regular steel blade for fast, smooth cuts.

Exact-I-Rip Advantage #2: Lock the fence into place–at the front and rear–with just one lever, for consistent cutting width.

Exact-I-Rip Advantage #3: Includes additional aluminum extension to help stabilize table for really large work pieces (such as 4x8 plywood sheets).

Cast iron table and extensions dampen vibration.

The smooth-running 3 H.P. (Max. Developed) capacitor-start, capacitor-run induction motor packs plenty of punch at 120V or 240V to cut stock up to 3-3/8" thick! Notched belt drive and spring-loaded motor mount reduces belt slippage for faster cuts.

Exact-I-Rip Advantage #4: Get pin-point accuracy in setting up your cuts, with the micro-adjust mechanism that lets you align the fence with precision.

Sawdust collection kit makes clean-up a snap.

Exact-I-Rip Advantage #5: Set-up's a breeze, thanks to the high-tech thermoplastic polymer bearing surfaces built into the Exact-I-Rip fence system. The fence always slides smoothly and easily–so you can get right to work!

Think all table saws are pretty much alike? Then you haven't checked out the Craftsman 10" Table Saw and Exact-I-Rip Fence Combo. Stock No. 29911. Together they cut the toughest jobs down to size – with an incredible new rip fence technology that gives you silky-smooth position changes, accurate cuts and a huge appetite for those large work pieces. In fact, the Exact-I-Rip fence is so terrific, we're offering it separately as a retro-fit option for other belt drive Craftsman table saws. Ask for accessory fence 29901.

CRAFTSMAN®

Only At Sears

SO POWERF
TO PUT A L

(LIMITED TIME OFFER OC

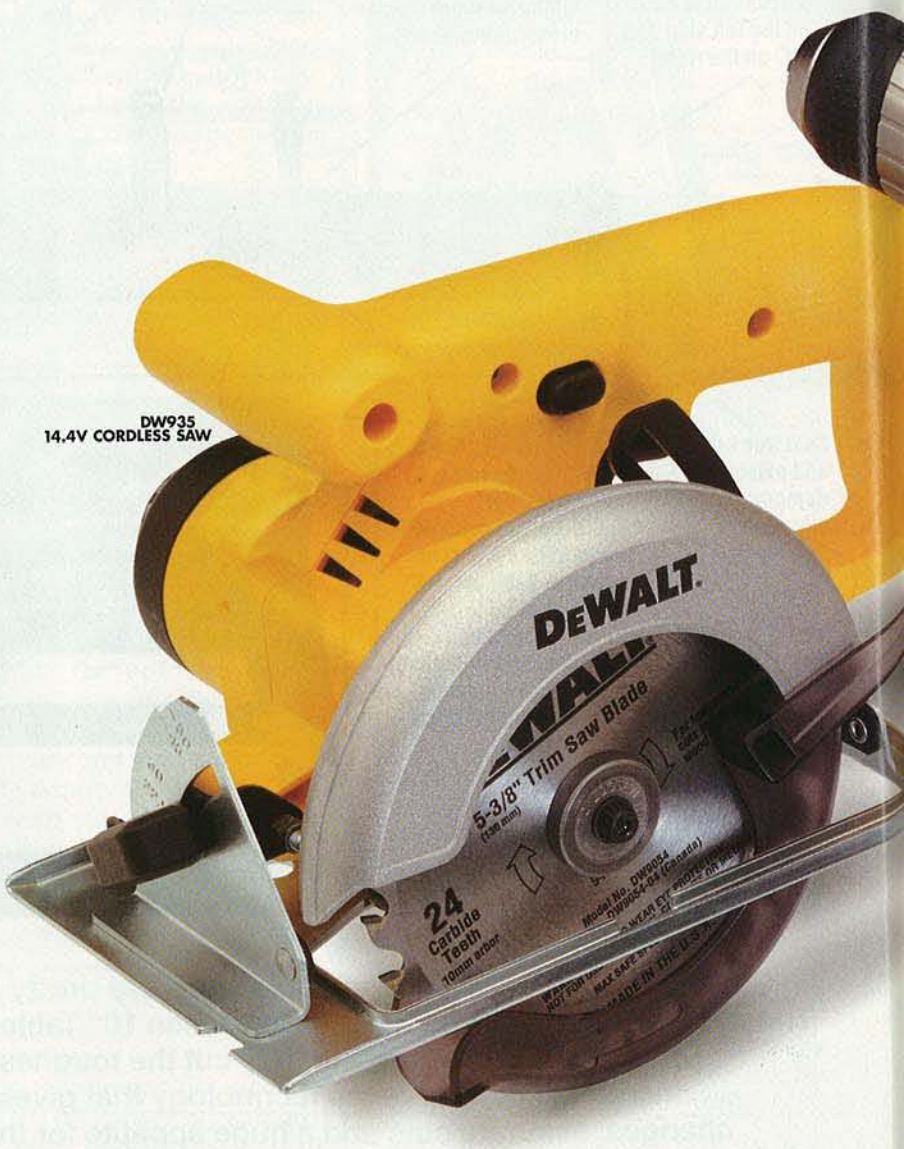

DEWALT is proud to introduce one powerful combination. For a limited time, we're combining two cordless tools, two batteries and a charger, all in one heavy-duty kit box. DEWALT's cordless drill/driver features a high performance fan-cooled motor with replaceable brushes to deliver long-lasting power for more professional applications than ever. And DEWALT's 14.4 volt cordless saw is simply in a class by itself. With 3,000 rpm's of power

UL WE HAD IMIT ON IT.

TOBER 15 - DECEMBER 31)

- 2 TOOLS
- 2 BATTERIES
- 1 CHARGER
- AND A KIT BOX

and a big 5 3/8" blade, it cuts everything from trim and molding to ½" plywood. And its 1 ½" cutting depth allows it to go through 75 or more 2x4's on a single charge.

Get your hands on a 14.4 volt or 12 volt DEWALT Combination Pack while there's still time. It's part of the most powerful cordless system in the industry. For more information, call 1-800-4-DEWALT.

DEWALT®
High Performance Industrial Tools & Accessories
MORE POWER LONGER.

©1995 DeWALT Industrial Tool Co.

TIPS FROM YOUR SHOP (AND OURS)

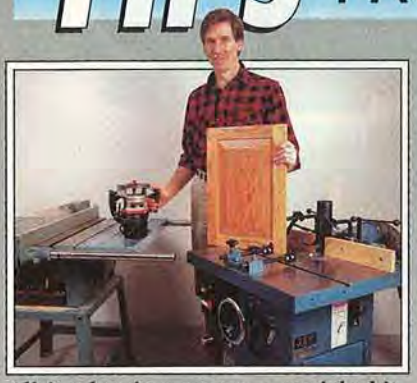

All it takes is a router, a straight bit, and a great idea to do the work of much bigger machines.

It used to take a big, expensive machine to cut a raised panel—either a shaper or a tablesaw. Then, raised-panel router bits that cost $50 to $100 came along. Now, reader Richard Colman (see his tip *right)* has lowered the cost of cutting raised panels to no more than the price of a ¾" straight bit. For helping woodworkers do more with less, we awarded Richard the top-shop-tip prize.

Money-saving tips never go out of style, and most woodworkers I know take pride in finding less-expensive ways to do things. The next time you discover a low-cost alternative to an expensive tool or technique, let me know about it. If we choose your tip, we'll pay you $40, plus you'll get a shot at winning a new tool for the top tip. Just send a description of the idea and a drawing or photo to:

Tips From Your Shop (and Ours)
***WOOD*® Magazine**
1912 Grand Ave.
Des Moines, IA 50309-3379

We try to publish original shop tips, so please send your idea to only one magazine. Also note that we cannot return your submissions.

Tom Jackson
General-Interest Editor

Rout raised panels with a straight bit

For a low-cost way to make raised panels, try using a straight bit and an elevation rail on your router table. Use a bit with a bottom-cleaning profile like you find on hinge-mortising bits. These will leave you with less sanding to do than with a regular straight bit.

Start by positioning the fence and elevation rail so that your panel tilts at a 15° angle, as shown in the drawing of the router table *below.* Secure a ¾" straight bit into your router, and adjust the height to make the cut as shown in STEP 1. Make this cut on all four sides of the panel.

Now, remove the elevation rail, move the fence in, and make the flat cut shown in STEP 2, again on all four sides. Move the fence back out, and lower the bit to clean up the shoulders with the cut shown in STEP 3. Now, you've got a raised-panel profile that measures almost 1½" wide.

—Richard Colman, Sr., Boscawen, N.H.

For submitting the top tip, Richard will receive 20 Jorgensen E-Z Hold II Bar/Spreader Clamps from the Adjustable Clamp Co.

TOP SHOP TIP

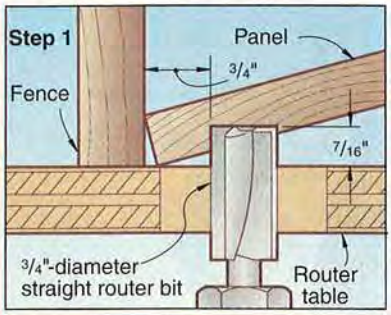

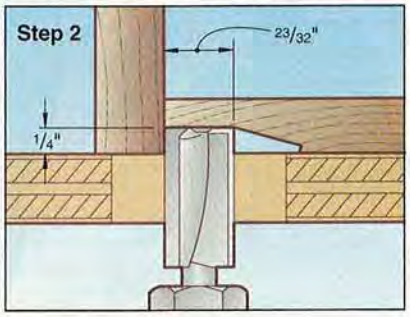

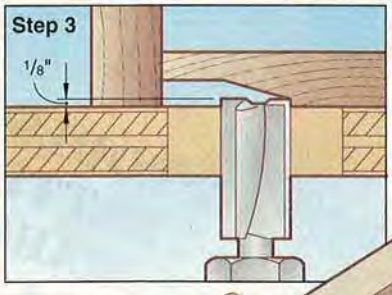

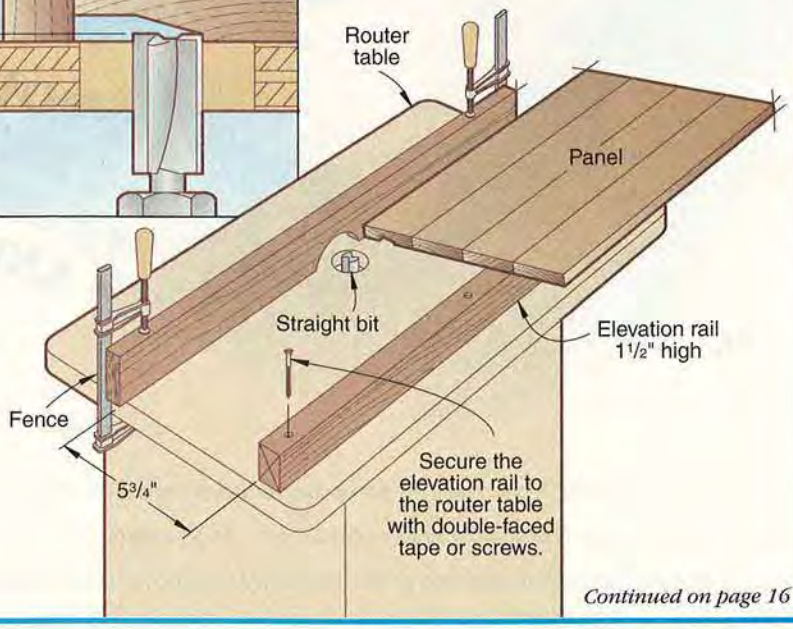

Continued on page 16

ANY SANDER CAN FINISH. ONLY ONE CAN FINISH FIRST.

DEWALT's DW421 Random Orbit Sander took on all challengers and was chosen as the best all-around palm grip sander. The experts especially liked how smoothly it ran, its highly efficient dust collection system and its unique Controlled Finishing System™ CFS that eliminates start-up scratching by keeping the sanding pad at a controlled speed on and off your work surface. Get your hands on a DEWALT Random Orbit Sander, and try the palm grip that left the competition in the dust. For more information, call 1-800-4-DEWALT.

DEWALT
High Performance Industrial Tools & Accessories
GUARANTEED TOUGH.™

* 1994 *American Woodworker* Editor's Choice award winner.

©1995 DEWALT Industrial Tool Co.

The Dremel MultiPro.
At 30,000 rpm, nothing works faster.

Cut off rusty bolts

Fix a sticky door

Polish chrome trim

Sharpen an axe

Re-slot painted screws

Refinish an iron gate

Install a smoke alarm

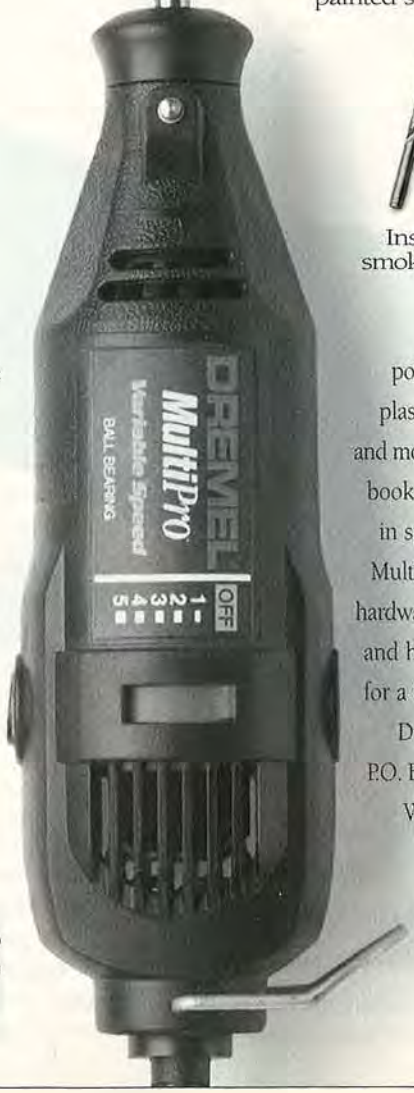

The Dremel MultiPro is the fastest high-speed rotary tool. And it's extremely versatile. With up to 30,000 rpm it has the speed you need to effortlessly power through hundreds of jobs. You just guide the tool, the speed does all the work. 150 available accessories let you sand wood, polish brass, shape plastic, grind metal, and more. Look for our book with *175+ Uses* in specially marked MultiPro packages at hardware, home center and hobby stores. Or for a free copy, write: Dremel, Dept. W, P.O. Box 1468, Racine, WI 53406-1468.

DREMEL® MultiPro

TIPS FROM YOUR SHOP (AND OURS)

Continued from page 14

For a durable scrollsaw pattern, try stencil material

The next time you need a reusable pattern for scrollsawing letters, head for the sewing supplies store and pick up a few sheets of plastic stencil material. Cut a piece of this material with scissors to the same size as your workpiece and glue it to your workpiece using a spray adhesive. Then, secure the paper pattern to the top of the stencil material, also with spray adhesive.

Now, cut out the pattern with your scrollsaw. Peel off the paper pattern and stencil material, and save the stencil material. The next time you need to reuse the pattern, simply place the stencil letter on your wood and trace around it. You can use the stencil pattern for years without it losing its shape.

—Kathy Fowler, Stockton, N.Y.

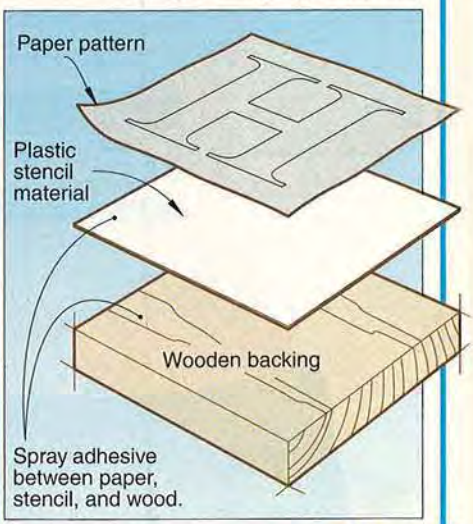

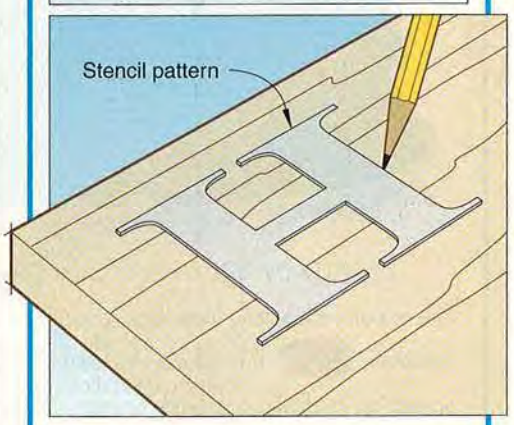

Continued on page 18

CRAFTSMAN MAKES A GOOD TABLESAW, BUT ONLY WE CAN TOP IT.

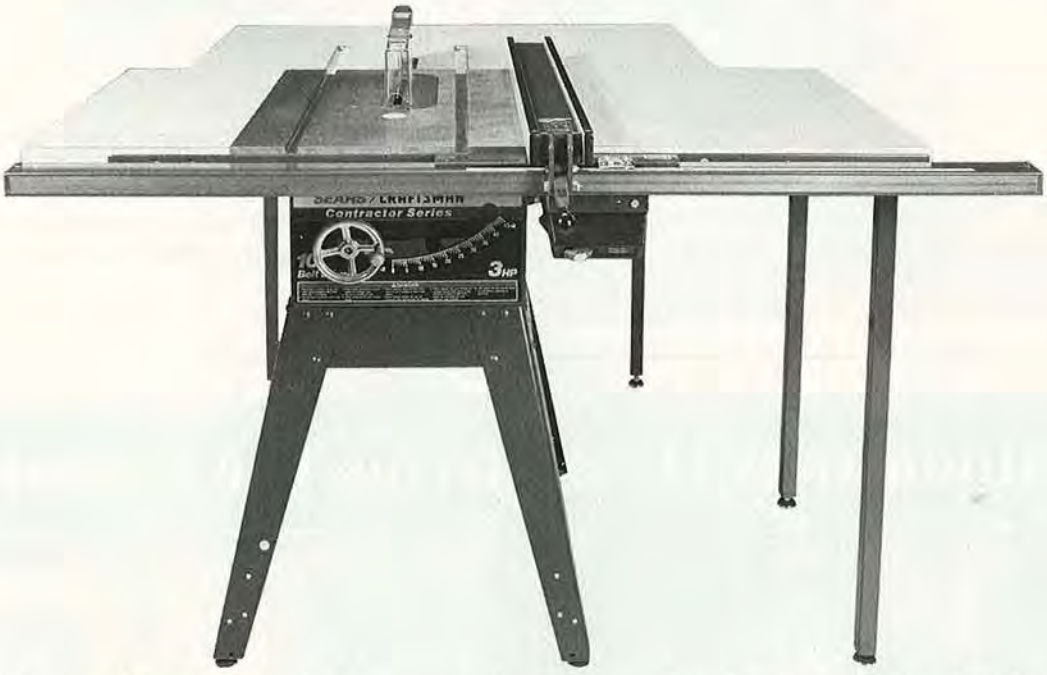

We know you've got choices when it comes to tablesaw accessories, but the proven fact is that Biesemeyer is better.

Over 15 years ago Biesemeyer introduced new saw fence technology that has won awards and legions of fans as it changed the way a tablesaw is used. The built-in tape and hairline pointer easily enable you to make precision setups quickly and consistently. And unlike other saw fence systems that count on a rear lock to crutch a weak front lock, the strength of the locking mechanism on the T-Square® saw fence allows precisely square cuts time after time.

Biesemeyer hasn't lost sight of your larger cutting needs. Don't settle for cutting capacity limited to only 30" when even our homeshop systems offer up to 52" to the right of the blade and 48" to the left, allowing even 4'x8' panels to be cut with ease.

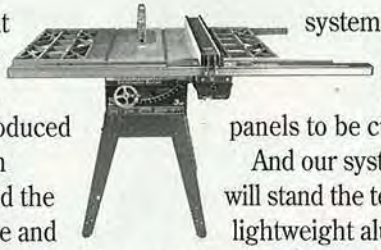

And our system's all-steel construction will stand the test of time. Systems made of lightweight aluminum can flex and eventually fail to provide square cuts. The system pictured above bolts right onto most existing Craftsman saws with no drilling required.

So turn your Craftsman tablesaw into the precision cutting instrument it was meant to be. The full line of Biesemeyer products are available at over 530 professional woodworking machinery dealers throughout the U.S. and Canada. For the location of the dealer nearest you, call 1-800-782-1831.

BIESEMEYER

The Best Thing Next To Your Sawblade.

TIPS FROM YOUR SHOP (AND OURS)

Continued from page 16

Rug pads grip workpieces under sanders and routers

For a low-cost, no-slip mat to use under workpieces that you sand or rout, check in the rug section of your local discount store. The anti-slip pads that go under most throw rugs cost a fraction of what you'll pay for router pads. You can buy these in rolls large enough to cover a benchtop, and the open-mesh designs help prevent sawdust build-up on the surface.

— Harry Baribault, Indialantic, Fla.

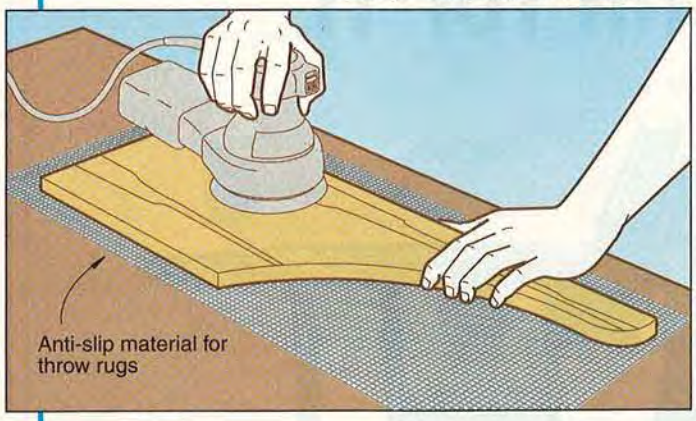

Modified jumper-wire clips put a big bite on small clamping jobs

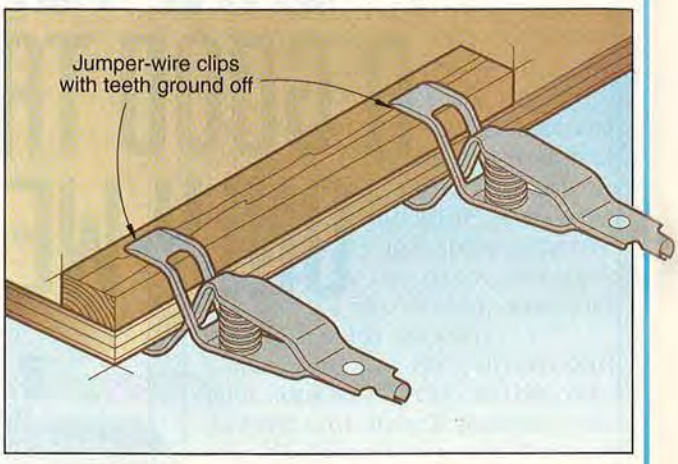

The next time you need small clamps, try grinding the teeth off some jumper-wire clips used by electricians. You'll find these clips in the electrical-supply section at most hardware stores. The clips exert a lot of pressure, and their jaws open up to about ¾".

—Harrold Keith, Cobble Hill, B.C.

Continued on page 20

RBIndustries Outperforms The Competition!

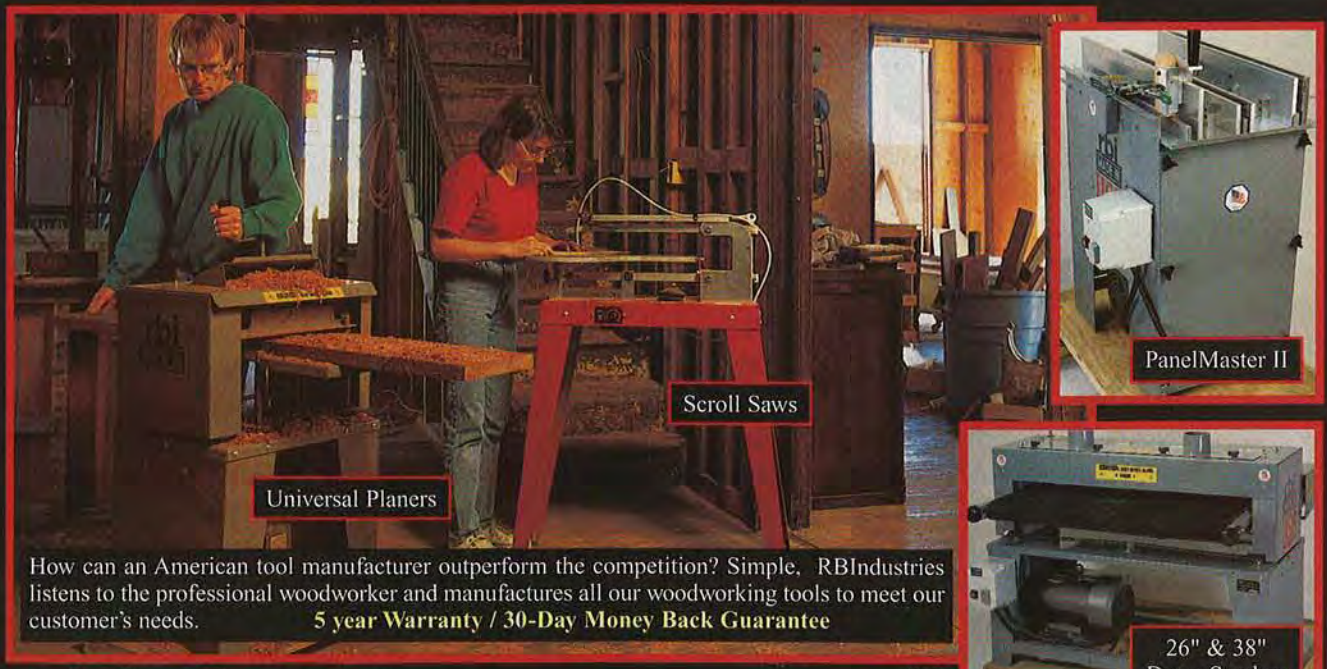

How can an American tool manufacturer outperform the competition? Simple. RBIndustries listens to the professional woodworker and manufactures all our woodworking tools to meet our customer's needs. **5 year Warranty / 30-Day Money Back Guarantee**

E113

rbindustries

The American Tool Manufacturer

Call 1-800-487-2623 for *FREE* Catalog

Circle No. 84

IT HAS TWO SPEEDS: FASTER THAN YOU AND MUCH FASTER THAN YOU.

© 1994 RYOBI AMERICA CORP.

THE NEW DETAIL CARVER BY RYOBI.

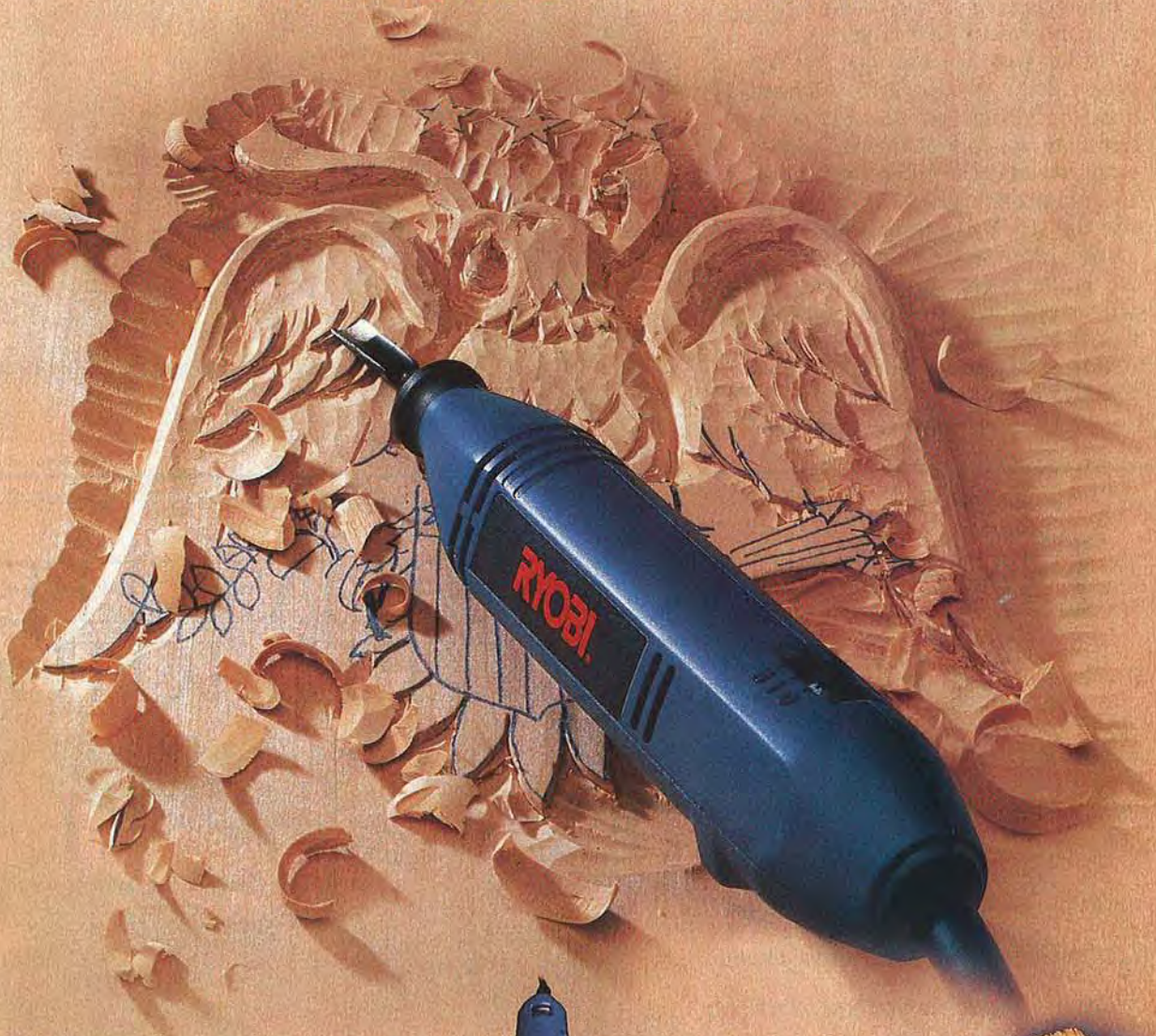

While the human hand is a powerful tool, carving by hand can be painfully slow. That's why we created our new Detail Carver. It gives you hand-carved results – with power tool speed and ease. And you control all the power. The Detail Carver's ergonomic body, two speeds, and five interchangeable chisels let you quickly rough in and precisely finish off every carving project. Relief carving. Incised carving. Sculpting. Antique restoration. In every stock from apple to zebrawood. All with pinpoint finesse, in a fraction of the time hand carving takes. Yet the Detail Carver costs no more than the hand carving sets it'll leave in the dust. Ryobi carves out another advance in power tool design. We've brought the fine art of hand carving up to speed.

MADE IN USA

RYOBI

Making Innovative Concepts A Reality™

ALL RYOBI PRODUCTS ARE WARRANTED FOR 2 YEARS • FOR INFORMATION, CALL 1-800-525-2579 • 5201 PEARMAN DAIRY RD., SUITE 1, ANDERSON, SC 29625-8950

Circle No. 86, 925

TIPS FROM YOUR SHOP (AND OURS)

Continued from page 18

Steady plug cutter with guide holes in plywood

Have you ever tried to use a plug cutter in a hand-held drill? The cutter usually dances all over the top of the workpiece. If you don't have a drill press to keep the cutter steady, here's a solution.

In a piece of ½" or thicker scrap plywood, drill a series of holes just big enough for the plug cutter to slip into without binding. Position the plywood template on top of the stock you want to take some plugs from, and securely clamp the plywood and the stock to a benchtop.

Now, insert your plug cutter into the guide holes and drill into the plug stock. The holes in the plywood will keep the plug cutter steady enough as you drill to give you good results.

—Jack Schmittel, Durango, Colo.

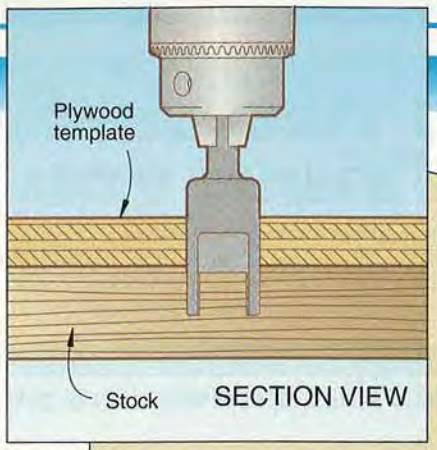

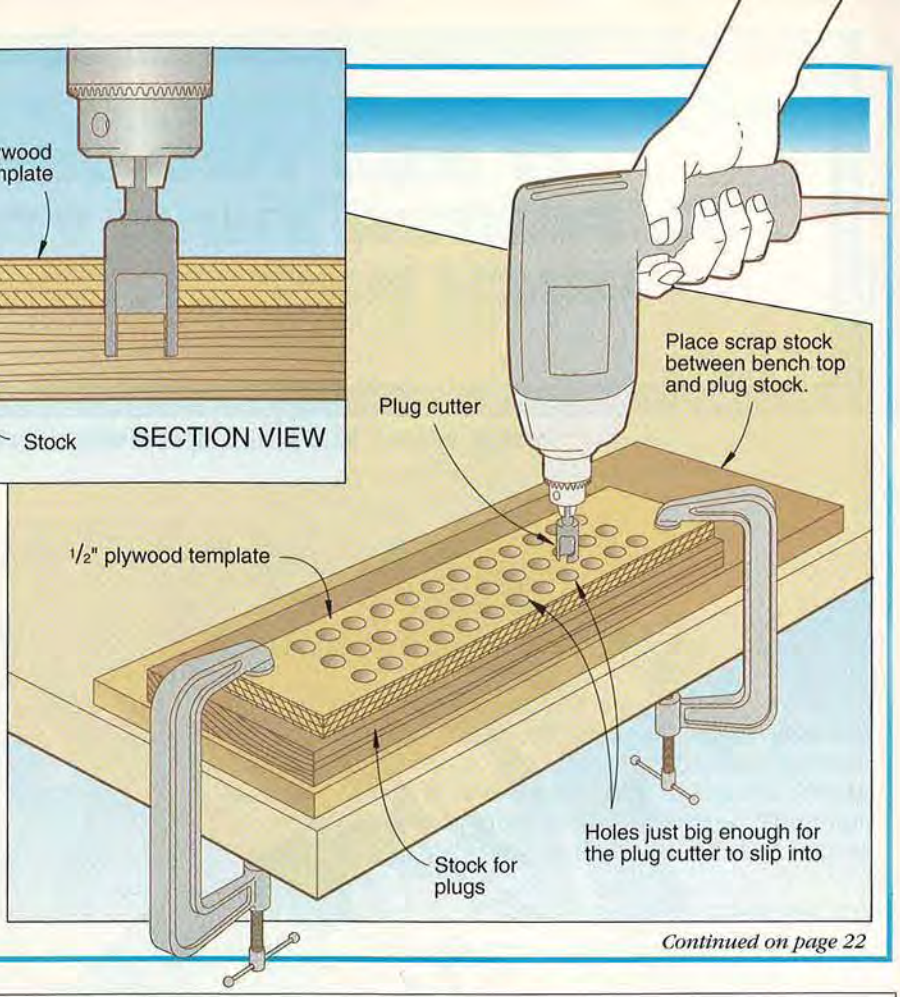
Plug cutter
Place scrap stock between bench top and plug stock.
1/2" plywood template
Holes just big enough for the plug cutter to slip into
Stock for plugs

Continued on page 22

FINALLY A CHRISTMAS OFFER WITH SOME TEETH TO IT

Buy a Dremel 1671, 1672 or 1695 Scroll Saw in specially marked packages and get 50 bonus blades free!

Dremel Scroll Saws have features like a 16 inch throat, multiple speeds, a two inch cutting capacity, a built-in dust blower, a large cast aluminum table and a heavy cast iron base. And they accept pin and plain end blades.

From beginner to expert, Dremel has a reliable, easy to use scroll saw with the features you want. And with our 50 blade Christmas bonus offer, it's a deal no wise man or woman could pass up.

50 FREE BLADES (A $35 VALUE)

DREMEL®

WE MAKE IT A POINT TO HANDLE THE DETAILS

Now you can sand, buff, polish, strip, and scrape in nooks and crannies. Without scraped knuckles or a bruised budget.

Choose your favorite – Ryobi's original Detail Sander 1000 or our two-speed Detail Sander 2000 – and no detail will be too small for you to handle.

RYOBI

Exceed Your Expectations™

AT BETTER HOME CENTERS AND HARDWARE STORES • CALL 1-800-525-2579 FOR INFORMATION • TWO-YEAR WARRANTY • MADE IN USA

Circle No. 86, 925

© 1995 Ryobi America Corp.

JoinTech

Ultra Precision Woodworking Systems

IPM™ Joinery Systems

This multi-patented system has been recognized by the experts as the *best* and the *easiest* to use to make dovetails and box joints plus, the best, all around patented dovetail incremental fence system you will ever own. Because **IPM's** accuracy is based upon a fine-threaded chrome lead screw, fine joinery is made easy and accurate cuts assured every time. Micro-adjustability even allows you to move the fence in thousandths of an inch increments.

Cabinet Maker's System™

This one can do it all. All cabinet making operations can be accomplished with this **ONE** System. **JOINTECH'S CabinetMaker's Systems** include all the Joinery System components plus our award-winning SmartFence. You don't have to be a master craftsman to build beautiful cabinetry, furniture or even jewelry boxes. Our 48 templates enable you to easily make every type of dovetail and box joint. SmartFence accommodates any cutter in your shop allowing you to make raised panels, rails & stiles, tongue & groove, face frame construction, drawer design, edgework and more. **JOINTECH'S CabinetMaker's System** is simply the best investment in quality and at a very affordable price.

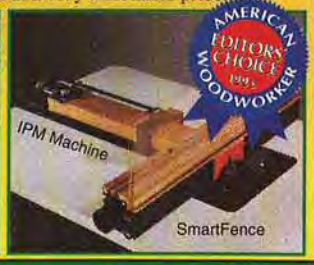

CALL, WRITE OR FAX FOR A FREE BROCHURE & SPECIAL INTRODUCTORY OFFER DETAILS!

P.O. Box 790727 • San Antonio, Texas 78279

Toll Free: (800) 619-1288 • Tel: (210) 377-1288 • Fax: (210) 377-1282

SEND, OR CHARGE BY PHONE, $5.00 FOR A COMPLETE DEMONSTRATON 35 MINUTE VHS VIDEO BROCHURE

Circle No. 610

ADVERTISEMENT

Hand Vacuum is Convenient and Versatile

Model 74

New from EUREKA

Convenience is the watchword for Eureka's new cordless rechargeable hand vac, The Boss®, which is winning over consumers with its light weight, ease of use, and versatility. The Boss hand vacuum weighs only 2 pounds and 9 ounces. It is powered by a 3.6 volt nickel cadmium rechargeable battery which is removable for environmentally-safe disposal. The Boss comes with a wall-mounted recharging stand and a six-foot power cord. It has an easy grip handle with finger-control on-off switch. The top-filling dust container empties easily.

Suggested retail price $19.99

For the dealer nearest you, call

1-800-282-2886

GREAT ENCOURAGEMENT FOR SHIPWRIGHTS!

All gentlemen shipwrights and able bodied modelists who have a mind to provide for themselves amusement and satisfaction through the traditional craft of ship modeling, an opportunity now offers to acquire, through the minimal cost of one Colonial Dollar ($1.00), a catalog of fine and unique ship model kits, plans, books and fittings from the renowned company of Model Expo located in Mt. Pocono in the state of Pennsylvania.

Send $1.00 for a catalog to:

MODEL EXPO, INC.

Dept. WDC5, PO Box 1000, Mt. Pocono, PA 18344

Name_____

Address_____

City_____

State_____ Zip_____

Circle No. 1075

TIPS FROM YOUR SHOP (AND OURS)

Continued from page 20

Coffee-can lids make great spacers for saw blades

If you stack your tablesaw or circular-saw blades for storage or transport them to a sharpener, you need spacers between them to prevent the carbide teeth from chipping each other. But rather than go to the trouble and expense of cutting out hardboard or plywood spacers, just save a few of the plastic lids that come on three-pound coffee cans. Bore a hole the size of your saw's arbor in the center of these, and place them between your blades.

—Ken Kraft, Boise, Idaho

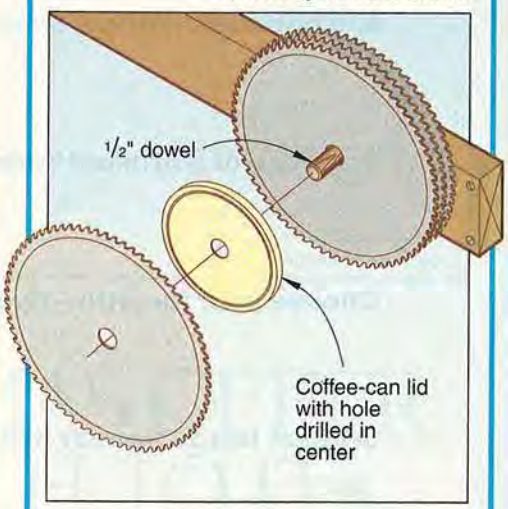

A FEW MORE TIPS FROM OUR WOODWORKING PROS

- Many pieces built during the Arts-and-Crafts era used ebony buttons for decoration and to hide screw heads. Highlight your own pieces with some easy-to-make buttons using our method on *page 82.*
- Tired of the same old commercially available clock faces? Check out the copper face we designed for the mantel clock on *page 8.*
- For a beautiful finish on your turnings, try Bonnie Klein's recipe on *page 69.* It's easy to apply right on the lathe, and it cures instantly.

ONLY A CORVETTE™ COULD TURN 175-MPH WITH 5 HORSEPOWER!

Corvette™ Vac Wet/Dry

- *New* Corvette™ Convertible Model 2829 packs 5 peak HP, produces 175-mph air velocity with its detachable, portable blower—easy yard cleanup!
- Sleek body design with capacities to 13 gallons.
- Five-wheel chassis for go-anywhere stability.
- For garage, home & auto.

High-velocity portable blower on Model 2829 makes leaf cleanup a breeze. It snaps off easily, snaps back quickly onto base in any position, 360°. Model 2827 even has a port that converts to a blower.

Model 2827

Model 2829

On-board tool storage includes a 1¼" hose, two 1¼" wands, floor nozzle with squeegee. Also included: 2½" hose, 2½" wand, blower nozzle and diffuser.

Corvette™ Vac Hand Vac

- Powerful 19,000-rpm motor drives brush roll.
- Clear, easy-empty dust cup; no bags to buy.
- Convenient 25-ft. power cord.
- For home or auto.

Riser Visor™ rotates up or down to clean both vertical and horizontal surfaces.

Model 52

Call 1-800-282-2886 for the dealer nearest you.

The Corvette Vacs by EUREKA®
VACUUM CLEANERS

© 1995. The Eureka Company, Bloomington, IL 61701. In Canada: Cambridge, Ontario N3H 2N7. In Mexico City: Andromaco 16, C.P. 11520.
CORVETTE, Corvette emblems and Body Design are trademarks of Chevrolet Motor Division, General Motors Corporation, used under license to Eureka.

GREAT IDEAS FOR YOUR SHOP

AT-THE-READY DRILL-BIT HOLDER

Fold-up metal drill-bit boxes save space, but they make it hard to see and retrieve bits. With our drill-bit holder you can find your bits in a jiffy without having to open a box.

To make the holder, remove and measure the metal cartridges that hold your drill bits. Dado the two sides of the holder as shown to match the width of the cartridges. After you glue the two halves together and attach the base, insert spacer blocks at the bottom of the dadoes as necessary. These raise the cartridges high enough so you can read the bit sizes stamped on the front.

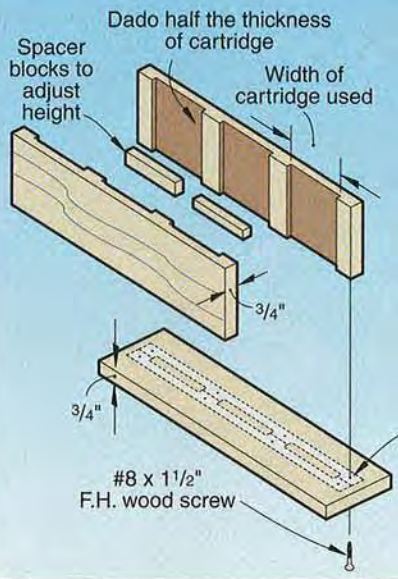
Dado half the thickness of cartridge
Spacer blocks to adjust height
Width of cartridge used
3/4"
3/4"
#8 x 1 1/2" F.H. wood screw
5/32" shank hole, countersunk on bottom, 7/64" pilot hole

DRILL-BIT HOLDER

Project Design: Erv Roberts
Photograph: King Au
Illustration: Roxanne LeMoine

Print this article

Give Yourself Some Breathing Room.

Model 8-12
Model 10-16

JDS AIR-TECH 2000™

Recent medical studies show that breathing wood dust can be hazardous to your health. The JDS AIR-TECH 2000 will dramatically improve the quality of the air in your workshop.

Our model 350 delivers 350 CFM of filtered air. This will clean the air in a 20 x 20 x 8 foot shop six and a half times per hour. For larger areas, our dual speed model 8-12 will deliver 800 or 1,250 CFM of filtered air for only $495. Our model 10-16 will deliver 1,000 or 1,600 CFM of filtered air for $695.

The JDS AIR-TECH 2000 systems will remove 99% of dust particles as small as five micron and 80% of the particles as small as one micron.

Our unique design makes both ceiling installation and filter changing quick and easy.

For the removal of odors, fumes and smoke, our optional charcoal filter is available.

$259.00
Model 350

Another quality product from
Manufactured in the U.S.A.
JDS COMPANY

To place an order or for the dealer nearest you call us toll-free.
1-800-382-2637
And give yourself some breathing room.

You will run out of these

before you run out of power

Introducing the Super MAKPAK System that keeps you working 40% longer

Whether you're a professional or do-it-yourselfer, Makita's new family of Super MAKPAK power tools provides the power you need and the convenience you demand. With 40% more capacity per charge and an optional EZ read power display, the new Makita Super MAKPAK series has the power to keep you on the job.

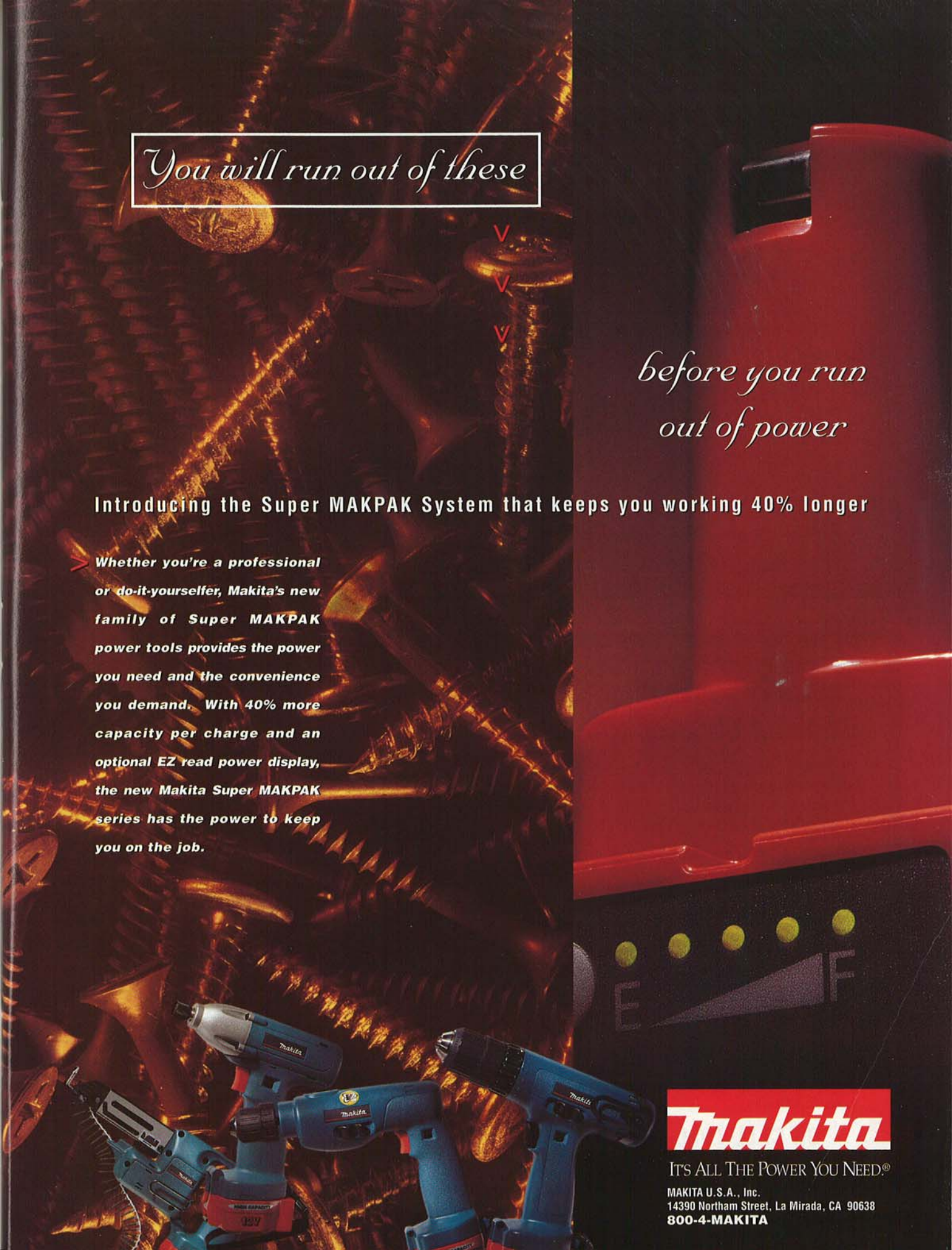

Makita

IT'S ALL THE POWER YOU NEED.®

MAKITA U.S.A., Inc.
14390 Northam Street, La Mirada, CA 90638
800-4-MAKITA

SCROLL SAWING

EASY·EASY·EASY

with HEGNER...the better scroll saw

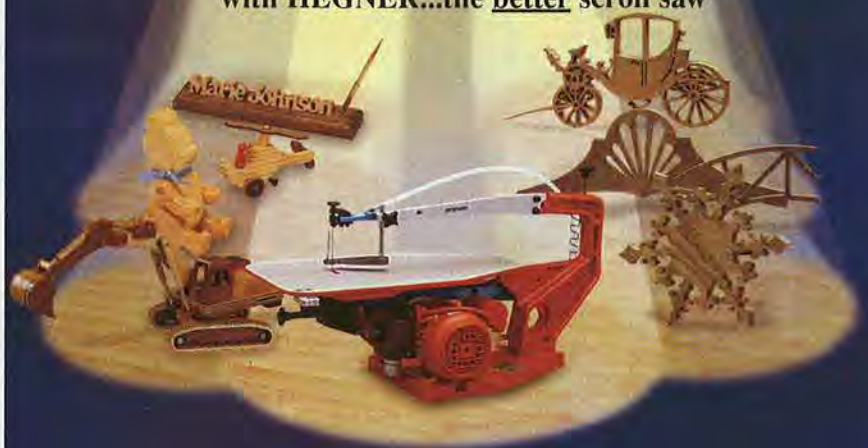

Try a HEGNER Scroll Saw and experience the pleasure of smooth, quiet operation, quick and easy blade changes, and perfect results everytime. With the world's top-rated scroll saw, scroll sawing will be easy for you! Call today for a FREE catalog!

☎ 800·322·2226 ☎

(please tell the operator your code is 691)

Advanced Machinery Dept. 691, P.O. Box 312 New Castle, DE 19720

Circle No. 3

Transform ordinary pieces of wood into beautiful works of art!

DECORATIVE WOODCRAFTS™ Magazine is filled with everything you need to paint and decorate spectacular wood projects — projects you never dreamed you'd try!

- Over 12 all-new projects per issue
- Step-by-step instructions
- Painting and decorating techniques
- Removable full-size patterns
- Tips and tricks from the pros

Better Homes and Gardens
Decorative
WOODCRAFTS
ANTIQUING TIPS FROM THE PROS
Years of experience make top designers experts on easy ways to antique your wood
See page 14
THINK SPRING!
Craft our flower garden, country cats, birdhouses and bunnies
SAVE $10.00
off established rate!

MONEY-BACK GUARANTEE

If, for any reason, during your subscription you decide to cancel, we'll promptly send you a refund for all unmailed issues.

Send $19.97 for one year (6 issues) to:

Better Homes and Gardens® DECORATIVE WOODCRAFTS® Magazine, 6060 Spine Road, Dept. 4ZMQ6, P.O. Box 54696, Boulder, CO 80322-4696.

OR CALL TOLL-FREE: 1-800-477-4271

Add $8 for Canadian (plus GST) and other foreign subscriptions.
Please allow 6–12 weeks for delivery of first issue.

Statement of Ownership, Management and Circulation (Required by 39 U.S.C. 3685) 1. Title of Publication: Better Homes and Gardens® *WOOD*® Magazine. 2. Publication No. 724890. 3. Filing Date: September 29, 1995. 4. Issue Frequency: Nine times a year in January, February, April, June, August, September, October, November, and December. 5. No. of Issues Published Annually: 9. 6. Annual Subscription Price $25. 7. Complete Mailing Address of the Known Office of Publication is 1716 Locust Street, Des Moines, Polk County, IA 50309-3023. 8. Complete Mailing Address of the Headquarters of General Business Offices of the Publisher: 1716 Locust Street, Des Moines, Polk County, IA 50309-3023. 9. Full Names and Complete Mailing Addresses of Publisher, Editor, and Managing Editor: Publisher: William R. Reed, 1912 Grand Avenue, Des Moines, IA 50309-3379; Editor: Larry Clayton, 1912 Grand Avenue, Des Moines, IA 50309-3379; Managing Editor: James V. Harrold, 1912 Grand Avenue, Des Moines, IA 50309-3379. 10. Owner: Meredith Corporation, 1716 Locust Street, Des Moines, IA 50309-3023. The Names and Addresses of Stockholders Owning or Holding 1 Percent or More of the Total Amount of Stock: The Bank of New York, 925 Patterson Plank Rd., Secaucus, NJ 07094; Bankers Trust Co., Corporate Securities Services, 16 Wall Street - Level D, New York, NY 10005; Boston Safe Deposit & Trust Co., c/o ADP Proxy Services, 51 Mercedes Way, Edgewood, NY 11717; Brown Brothers Harriman & Co., 63 Wall Street - 8th Floor, New York, NY 10005; Chase Manhattan Bank, N.A., One Chase Manhattan Plaza, 38 Proxy Dept., New York, NY 10081; Chemical Bank, Auto Settle Department, Four New York Plaza - 4th Floor, New York, NY 10004; Mellon Bank, N.A., c/o ADP Proxy Services, (see address above); Northern Trust Co. - Trust, c/o ADP Proxy Services, (see address above); Norwest Bank MN - Trust, 255 Second Avenue South, Minneapolis, MN 55479-0047; SSB - Custodian, c/o ADP Proxy Services, (see address above); U. S. Trust Co. of New York, 770 Broadway, New York, NY 10003; Wells Fargo Institutional Trust Co., 45 Fremont St., 16th Floor, San Francisco, CA 94105.

Through some of the nominees listed above, the E. T. Meredith and Bohen families and family foundations own directly or beneficially, approximately 29% of the issued and outstanding stock of the corporation. Each nominee listed above holds stock for one or more stockholders. 11. Known Bondholders, Mortgagees, and Other Security Holders Owning or Holding 1 Percent or More of Total Amount of Bonds, Mortgages, or Other Securities: None. Item 12 of PS Form 3526 not applicable. 13. Publication Name: Better Homes and Gardens® *WOOD*® Magazine. 14. Issue Date for Circulation Data: September 1995. 15. Extent and nature of Circulation: A. Total No. Copies (Net Press Run): Average No. Copies Each Issue During Preceding 12 Months, 823,660; Actual No. Copies of Single Issue Published Nearest to the Filing Date, 833,274. B. Paid and/or Requested Circulation: 1. Sales Through Dealers and Carriers, Street Vendors, and Counter Sales (Not Mailed): Average No. Copies Each Issue During Preceding 12 Months, 63,000; Actual No. Copies of Single Issue Published Nearest to the Filing Date, 60,000. 2. Paid or Requested Mail Subscriptions (Include Advertisers' Proof Copies/Exchange Copies): Average No. Copies Each Issue During Preceding 12 Months, 587,044; Actual No. Copies of Single Issue Published Nearest to the Filing Date, 602,116. C. Total Paid and/or Requested Circulation (Sum of 15b1 and 15b2): Average No. Copies Each Issue During Preceding 12 Months, 650,044; Actual No. Copies of Single Issue Published Nearest to Filing Date, 662,116. D. Free Distribution by Mail, (Samples, Complimentary, and Other Free): Average No. Copies Each Issue During Preceding 12 Months, 9,382; Actual No. Copies of Single Issue Published Nearest to Filing Date, 8,342. E. Free Distribution Outside the Mail; (Carriers or Other Means): Average Number Copies Each Issue During Preceding 12 Months, 3,316; Actual No. Copies of Single Issue Published Nearest to Filing Date, 3,326. F. Total Free Distribution (Sum of 15d and 15e): Average No. Copies Each Issue During Preceding 12 Months, 12,697. Actual No. Copies of Single Issue Published Nearest to Filing Date, 11,668. G. Total Distribution (Sum of 15c and 15f): Average No. Copies Each Issue During Preceding 12 Months, 662,741. Actual No. Copies of Single Issue Published Nearest to Filing Date, 673,784. H. Copies Not Distributed: (1) Office Use, Left Overs, Spoiled: Average No. Copies Each Issue During Preceding 12 Months, 654. Actual No. Copies of Single Issue Published Nearest to Filing Date, 1,000. (2) Return from News Agents: Average No. Copies Each Issue During Preceding 12 Months, 160,266; Actual No. Copies of Single Issue Published Nearest to Filing Date, 158,490. I. Total (Sum of 15g, 15h(1), 15h(2.) Average No. Copies Each Issue During Preceding 12 Months, 823,660. Actual No. Copies of Single Issue Published Nearest to Filing Date, 833,274. Percent Paid and/or Requested Circulation (15c/15g×100.) Average No. Copies Each Issue During Preceding 12 Months, 98.08%. Actual No. Copies of Single Issue Published Nearest to Filing Date, 98.27%. 16. This statement of ownership will be printed in this December 1995 issue of this publication. 17. Signature and Title of Editor, Publisher, Business Manager, or Owner: (Signed) William R. Reed, Publisher. Date: September 29, 1995. I certify that all information furnished on this form is true and complete. I understand that anyone who furnishes false or misleading information on this form or who omits material or information requested on the form may be subject to criminal sanctions (including fines and imprisonment) and/or civil sanctions (including multiple damages and civil penalties.)

ENLON®
IMPORT CORPORATION
The Power You Can Trust

FALL SEASON *Sale!*

Enlon is now in its 4th year of serving you with innovative new products and improvements. Enlon's quality far surpasses other brand name, products that look like Enlon's, such as the Enlon 10" Heavy-Duty Table Saw model #EN3202, Oscillating Vertical Spindle Sander model #EN3407, and more.

10" TILTING ARBOR SUPER HEAVY-DUTY TABLE SAW MODEL #EN3202

This industrial quality table saw features a heavy-duty cast-iron table top, 3 H.P., 220V, 15 AMPS, single phase motor, Enlon exclusive self-aligning 36" rip fence system, heavy-duty steel stand with dust collector port, magnetic safety switch and much more.

Reg. $795.00
$735.00

❻ #EN3202R 56" CAPACITY EXTENSION RAILS $185.00
Table top not included.

❺ OUTFEED ROLLER ATTACHMENT
#EN3227 (w/18") $160.00
#EN3228 (w/37") $220.00

❶ #EN3225 HEAVY-DUTY SLIDING TABLE $550.00

❷ #EN3229 SWITCH SWING MOUNTING BRACKET $16.00

❹ #EN3226 MICRO-ADJUSTMENT KIT $20.00

❸ #EN3221 MOTOR COVER $50.00

NEW! 24" DUAL DRUM SANDER MODEL #EN3409

This is the newest Enlon innovation with a full 24" sanding area, three rubber coated hold down rollers, and all sealed ball bearing construction. The quality of this machine is far beyond the introductory price that we're offering right now.

- 5 H.P., Single Phase, 220 Volt and 25 AMP Main Motor
- 1/4 H.P., 220 Volt and 3 AMP Belt Feed Motor
- Magnetic Starter and Reversing Switch
- Twin 6" Diameter Rubber Coated Drums
- 2 Stock Feeding Rates 11 and 17 F.P.M.
- 2 Built-In 4" Dust Collector Ports

Reg. $1,200.00
INTRODUCTORY PRICE
$950.00

OSCILLATING VERTICAL SPINDLE SANDER MODEL #EN3407

This machine is one of Enlon's innovations, and won the American Woodworker Editors' Choice Award. Don't be fooled by look-alike and low quality of other brand names that copy Enlon's. Enlon was the first to offer this import fine quality machine in the market on April 1994.

Wood Magazine "If you're looking for the most oscillating spindle sander for the money, buy the Enlon. This heavy-duty machine is made to survive the long haul, and has power to spare."

- 1 H.P., 110/220V
- 75 Oscillations Per Minute
- Spindle Speed 1,725 R.P.M.
- Built-In 4" Dust Collector Port
- Includes Set of 10 Removable Spindles

Reg. $565.00
SALE $500.00

See ***Wood*** Magazine September, 1994 issue and October, 1994 issue of ***American Woodworker*** Magazine value reference.

SHOWROOM/MAIN OFFICE:
17709 East Valley Boulevard.
City of Industry, CA 91744

CUSTOMER SERVICE:
TEL (818) 935-8888 FAX (818) 935-8889

HOURS (PST):
Monday-Friday 8:00 a.m.-5:00 p.m.
Saturday 9:00 a.m. -1:00 p.m.

VISA

GIFT CERTIFICATES AVAILABLE
Call Today for a Free Catalog

MasterCard

Pacific Time: Monday-Friday 7:00 a.m.-5:00 p.m.
Saturday 9:00 a.m.- 1:00 p.m.

1 (800) 888-9697

SHOWROOM/DISTRIBUTION CENTER:
12 Armory Road, Clarksburg, WV 26301

HOURS (EST):
Monday-Friday 8:00 a.m.-5:00 p.m.
Saturday 9:00 a.m.-1:00 p.m.

All machines above are F.O.B. City of Industry, CA or Clarksburg, WV
Prices and specifications are subject to change without notice.

TALKING BACK

We welcome comments, criticisms, suggestions, and even compliments. Send your correspondence to: Talking Back, *Better Homes and Gardens*® *WOOD*® Magazine, 1912 Grand Ave., Des Moines, IA 50309-3379. To contact us via computer, use these on-line addresses:
***CompuServe:* 74404,3516**
***Internet:* 74404.3516@compuserve.com**

How can I reduce the size of a plan?

I want to make a smaller version of the "Snow Stroller" shown in the November 1994 issue. How do I calculate the sizes of each piece?

—Lester Kocher, Rochester, Minn.

For a start, grab your calculator and multiply the measurements of each piece by a decimal based on the amount of reduction of the plan. For example, if you want to make a half-size copy of a part, divide 2 into 1, and the decimal you use is .5. For a ¾ scale piece, divide 4 into 3, for a decimal of .75. Here's an example, based on the snow-stroller runner (part A) downsized to a ¼ scale:

Part A	*T*	*W*	*L*
Original size	*¾"*	*3¼"*	*25½"*
¼ scale (× .25)	*3/16"*	*13/16"*	*6⅜"*

To make these calculations, you will need to change each fraction into a decimal. For example, the ¾" thickness dimension becomes .75". This measurement, when multiplied by .25 (the scale decimal) equals .1875. To make the fraction conversions easier, we have done them for you in the chart left.

Fraction-to-Decimal Conversion chart

Fraction	Decimal Equivalent
1/16"	.0625
1/8"	.125
3/16"	.1875
1/4"	.250
5/16"	.3125
3/8"	.375
7/16"	.4375
1/2"	.50
9/16"	.5625
5/8"	.625
11/16"	.6875
3/4"	.750
13/16"	.8125
7/8"	.875
15/16"	.9375

Uses for left-over Corian

After building the "Plant Stand with Panache" from the February 1995 issue, I found myself with left-over pieces of Corian looking for a home. As I paged through my back issues of *WOOD*, searching for a project, the "Echoes of Antiquity" clock plan in the February 1993 issue seemed promising.

I had some questions about whether I could make the columns by gluing together two pieces of ½" Corian, if I could turn them on a lathe, and whether I could resaw the material to a ⅛" or ¼" thickness. I found that the answer to all the above questions is "Yes!" I used epoxy for laminating the columns and assembling the clock. Here's a snapshot of my finished project.

—Wesley Henderson, Lexington, Ky.

More on harvesting mahogany

I would like to respond to reader Julia Wuollet who questioned the use of Honduran mahogany on ecological grounds in the April 1995 Talking Back column. My qualifications are that I lived in Belize (Central America) for a number of years, and operated a sawmill on our farm for our own use.

There is no clear cutting done to harvest mahogany, nor any other tropical species other than Caribbean pine. The simple reason for this is that most tropical species can be found as mature trees at the rate of 1.5 trees per square mile or less. These trees are logged selectively because the expense of extracting them does not warrant the handling of smaller trees.

This is not to deny that clear-cutting occurs in tropical forests. However, clear-cutting is not a forest management strategy, but rather an agricultural or range-creation strategy. The wood harvested is sold as random hardwoods because of the variation in species, density, and color. This wood often goes for industrial uses such as making pallets.

The greatest threat to the tropical forest ecosystem lies in the clearing of agricultural land for the production of beef for your fast-food hamburger. Commercial logging by large corporations comes in second. Selective harvesting of mahogany or other expensive tropical hardwoods for use by the small woodshop has a minimal effect on the forest.

—Clifford W. Mossberg, Kasilof, Alaska

We stand corrected

In the comment entitled "Cardboard tube makes for a sound idea" in our April 1995 Talking Back, we inadvertently misspelled the name of the contributor of that letter. The credit should read Howard L. Coy of Monroe, La. Our apologies to Howard for this error.

Glues for biscuit joinery

I read the article "Today's Advanced Woodworking Glues" in the June 1995 issue with interest. However, it didn't mention which glue to use for biscuit joinery. Can you recommend one?

—Stephen A. Garanin, Waltham, Mass.

We sure can, Steve. We prefer a yellow aliphatic resin glue like Titebond or Elmer's Woodworker's Glue for biscuit joinery. Because these glues are water-based, the moisture in the glue causes the compressed biscuit to swell, creating a tight fit.

Continued on page 30

Maxi-Combo™? Ultra-Cut™?

Dear Friend,

If you don't want the finest cuts you can get at any price, then don't bother reading this letter. Why? Because I personally guarantee that CMT's Maxi-Combo™ and Ultra-Cut™ blades will deliver the finest cuts you've experienced, or I'll refund your money no questions asked!

We commissioned master sharpener Matt ver Steeg to develop these blades with one goal: produce the best possible combination and laminate blades. The secret to his success is in the unique grinding of the blades' teeth. As shown at right, the Maxi-Combo employs a Chamfered Raker tooth to eliminate chipping. The Ultra-Cut features a 40° top bevel (most competitors' blades use teeth that range from flat to 20°) to produce the best cuts in 2-sided material you'll find anywhere.

Although our prices are very attractive, you may find cheaper blades on the market. The special tooth design of the Maxi-Combo and Ultra-Cut takes about 3 times as long to grind as the simpler shapes of your average mass-produced blade. We also laser-cut a special pattern of sound suppression slots in our blades to dampen vibration and reduce noise. Those features add a little to the cost of our blades, but they also give me the confidence to tell you that a CMT blade is the best blade, guaranteed!

Sincerely,

Carlo Venditto, C.E.O.

P.S. If your saw is a little under-powered, be sure to try our thin-kerf Maxi-Combo Lite™.

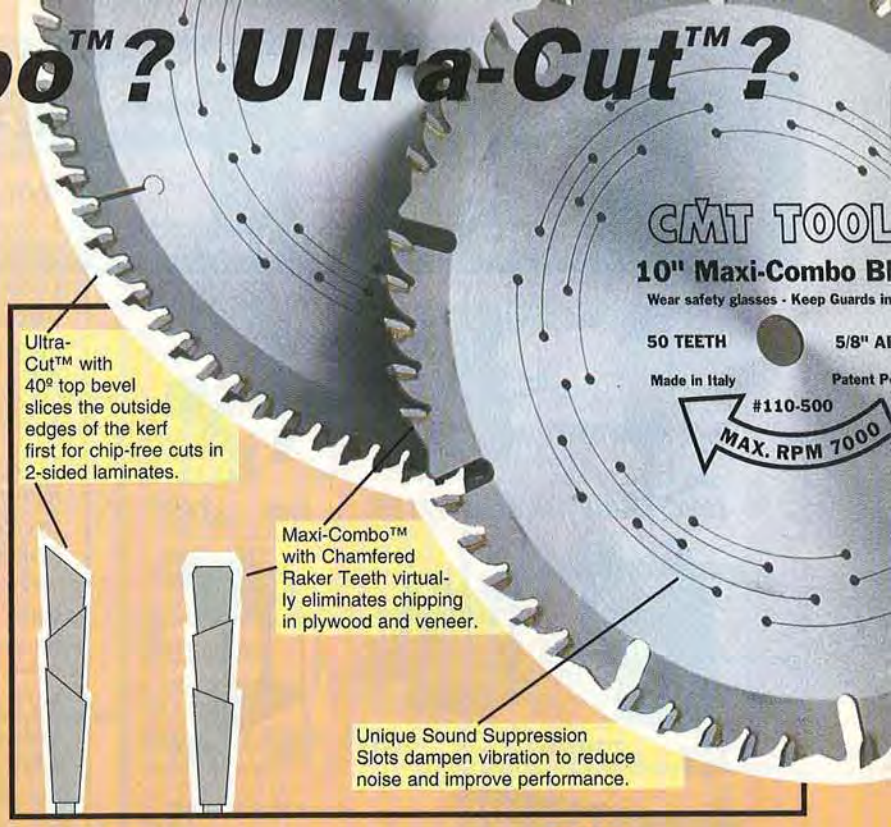
CMT TOOL
10" Maxi-Combo Bl
Wear safety glasses - Keep Guards in
50 TEETH
5/8" Al
Made in Italy
Patent P
#110-500
MAX. RPM 7000
Ultra-Cut™ with 40º top bevel slices the outside edges of the kerf first for chip-free cuts in 2-sided laminates.
Maxi-Combo™ with Chamfered Raker Teeth virtually eliminates chipping in plywood and veneer.
Unique Sound Suppression Slots dampen vibration to reduce noise and improve performance.

Carbide tipped Table Saw Blades

Item	Primary Function	No. of Teeth	List	Sale
10" diameter, 5/8" arbor:				
110-240	Ultra-smooth Ripping	24	$60.00	**$51.00**
210-240	***Thin-kerf*** Ripping	24	$69.00	**$58.65**
110-500	**Maxi-Combo™**	50	$78.40	**$66.60**
210-500	**Maxi-Combo Lite™**	50"	$79.00	**$64.90**
210-600	***Thin-kerf*** Fine	60	$84.40	**$71.70**
110-800	**Ultra-Cut™**	80	$100.90	**$85.80**
12" diameter, 1" arbor:				
112-300	Ultra-smooth Ripping	30	$84.00	**$71.40**
112-600	Combination	60	$109.00	**$92.65**
112-960	**Ultra-Cut™**	96	$139.00	**$118.15**

Carbide tipped Compound Miter Blades with 5° negative hook!

Item	Blade Diam.	No. of Teeth	Arbor Size	List	Sale
185-048	8-1/2"	48	5/8"	$59.40	**$50.50**
185-600	8-1/2"	60	5/8"	$74.40	**$63.20**
Perfect for your Hitachi 8-1/2" Miter Saw!					
110-801	10"	80	5/8"	$100.90	**$85.80**
Perfect for any 10" Miter Saw!					
112-901	12"	90	1"	$135.00	**$114.75**
Perfect for your 12" DeWalt Miter Saw!					
114-100	14"	100	1"	$144.00	**$122.40**
Perfect for your Makita or Ryobi 14" Miter Saw!					
115-100	15"	100	1"	$149.00	**$126.65**
Perfect for your Hitachi 15" Miter Saw!					

Carbide tipped Radial Arm Saw Blades

Item	Blade Diam.	No. of Teeth	Arbor Size	List	Sale
110-600	10"	60	5/8"	$84.40	**$71.70**

Two-blade Packages. SALE!

110-221 List: $134.00 110-240 Rip & 110-500 Maxi-Combo	**$100.50**
110-223 List: $201.90 110-800 Ultra-Cut & 110-801 Miter	**$151.40**
110-224 List: $153.40 210-240 Thin Kerf 24T Rip & 210-600 Thin Kerf 60T Fine	**$115.40**
110-225 List: $185.40 110-600 60T General Purpose & 110-800 80T Ultra-Cut	**$138.90**
110-228 List: $178.00 110-800 80T Ultra-Cut & 210-500 50T Maxi-Combo Lite	**$128.50**
110-233 List: $179.30 110-500 50T Maxi-Combo & 110-800 80T Ultra-Cut	**$119.00**

Blade Stiffening Collars: Improve the performance of table or radial arm saws! A must with thin-kerf blades. Not for portable saws.

Item	Description	List	Sale
SBS-005	5" Stabilizers (pair)	$25.20	**$19.90**
SBS-003	3" Stabilizers (pair)	$22.30	**$17.90**

CMT's Award-Winning Joint-Master 8" Dado Set

Includes CMT's *3/32" Ply-Groove Chipper* plus four 1/8" and one 1/16" chipper. The Joint-Master delivers incredibly smooth cuts, even in splinter-prone veneer plywood!

108-240S Dado Set with free Dado Shim Set

List: $268.40 **Sale: $179.00**

Our free catalog is packed with thousands of blades, bits, accessories and more! Call for your copy today!

Free shipping on orders over $200.00

$5.00 shipping & handling for orders under $200.00

To order, call toll-free 24-hours a day:

1-800-531-5559

Toll Free FAX: 1-800-870-7702

If you have questions or require assistance with your order, please call between 9 am & 6 pm ET

Dealer inquiries welcome!

For export orders please call:

(813) 891-6160 FAX: (813) 891-6259

CMT TOOLS,
310 Mears Boulevard, Oldsmar, FL 34677

In Canada, call: ToolTrend Ltd. 1-800-387-7005

Circle No. 1310

3 HP 1" SHAPER
$740 $665
3 HP 16" PLANER
$740 $685
1 HP 6" JOINTER
$345 $310
14" BAND SAW
$265 $250
20" PLANER
$1295 $1165
POWER FEEDER
$395 $345
3 HP 10" TABLE SAW
$770 $720
WIDE BELT SANDER
$885 $750
DRUM BRUSH SANDER
$295 $285
TRANSPOWER
Tel: 818-815-9897
Fax: 818-815-9807
Order Desk: 1-800-654-7702
CP TOOLS, INC. 611 DUGGAN AVE., AZUSA, CA 91702
Circle No. 15

$12,900* • PATENT PENDING • PROVEN CONCEPT
HOBBY TO PROFIT
"The ability to turn a hobby into an income producing venture while building net worth has greatly contributed to my motivation to succeed."
-Dave Raybeck,
Furniture Medic® Franchisee
Exclusive patent pending environmentally conscious restoration techniques allow Furniture Medic® to restore wood and furniture damage/defects *on site* for a fraction of replacement costs.
We provide equipment, specialized training, kick-off marketing campaign, national advertising/accounts and continuous support.
Turn Your Hobby Skills Into Business.
Free video for qualified canidates. (800) 877-9933 or (404) 361-9933
Master and Unit Licenses Available Worldwide.
FURNITURE MEDIC®
"the prescription for damaged furniture!"
For Nationwide On-Site Service Call 1-800-408-SERV
*See prospectus for details.

TALKING BACK

Continued from page 28

Where does the dust go?

I loved the IDEA SHOP™2 "Do-It-All Mobile Tablesaw Base" but I have two questions about this project: (1) What is the need for router bit storage under the tablesaw? These would seem more appropriately stored near the router. (2) Where does the sawdust go from the tablesaw?

—Howard Nitzberg, Del Ray Beach, Fla.

Your questions are easy to answer, Howard. The Ryobi BT3000 tablesaw we use in IDEA SHOP 2 includes a router table in an extension wing. Consequently, the bits are *stored near the router.*

The Ryobi tablesaw has a dust-extraction port built into the saw base. We connect a 2½" shop-vacuum hose to this nozzle to collect sawdust.

What happens when stain meets wood?

Other than the color change, what happens when I apply a wood stain to my projects?

—Shanon Warren, Sacramento, Calif.

To help understand the process, Shanon, you should know something about the composition of wood stains. Basically, stains are similar to thinned paint, and are composed of two primary parts: 1) the pigment or coloring material, and 2) the vehicle or liquid the pigment is suspended in.

The small flakes of coloring material that make up the pigment of a stain cause a color change on the wood simply by settling onto the surface of the board. The amount of pigment that lands on a board controls the lightness or darkness of the stain. The open grain on the ends of a board tend to collect a lot of pigment, causing these areas to appear dark. Edge- and face-grained areas tend to retain less of the colored pigment, and appear lighter. And, as most of us woodworkers have found, much to our chagrin, dried glue spots retain little or no stain pigment.

The vehicle of the stain has two primary purposes: to allow an easier and more even spreading of the pigment on the wood surface, and to provide a binder that fastens the pigment flakes to the wood surface as the vehicle dries.

Many of the pigments used to make wood stains are opaque, with the result that a stain often will obscure some of the grain of the wood. If this presents a problem with the project you're building, we suggest you use aniline dyes, which use a transparent coloring agent.

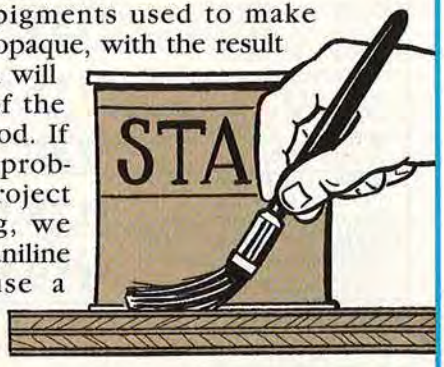

HARBOR FREIGHT TOOLS

LOW PRICE GUARANTEE
WE'LL BEAT ANY COMPETITOR'S PRICE ON ANY IDENTICAL ITEM –EVEN IF IT'S AN ADVERTISED SPECIAL

FREE SHIPPING! ★
FOR ALL ITEMS SHOWN BELOW!

RYOBI idc

GAS POWERED TRIMMER PLUS

With Ryobi's exclusive CLICK-LINK™ system you can turn this trimmer into a complete lawn and garden care system. Add snap-on accessories to as much as quadruple your trimmer's versatility.

- Factory reconditioned, factory perfect
- 31cc 2 cycle power
- 7000 RPM no load speed
- 15" cutting swath

ITEM 50275-0VKA **$49.99**

RYOBI

Ryobi OSS450

OSCILLATING SPINDLE SANDER

Nothing beats this machine for contour and curve sanding. 1/2" to 3" spindle sizes give you the control you need. Removes stock fast using the whole drum and prevents sanding burn marks.

- 120V, 3.5 amps • 1680 RPM
- 45 oscillations per minute
- 29 lbs. tool weight
- 1/2" & 1" drum diameters
- Dust collection port
- Factory reconditioned, factory perfect

LIMITED QUANTITIES

ITEM 33625-3VKA **$89.95**

QUICK-GRIP®
BY THE MAKERS OF VISE-GRIP® TOOLS

MINI BAR CLAMPS

Compact size and one hand operation. Soft pliable pads protect fine finishes.

6" CLAMP QUICK-GRIP® 546
ITEM 07652-6VKA **$8.29**

12" CLAMP QUICK-GRIP® 5412
ITEM 01948-2VKA **$11.99**

DRILL MASTER

INCLUDES A FITTED WOODEN CASE

FORSTNER BIT SETS

- 3/8" shanks
- Bores pilot holes for rabbeting, mortising and grooving
- Ideal for pocket holes, partial arcs and end grain holes

16 PC. SET
- Contains 1/4" through 2-1/8" bits by 8ths

ITEM 07525-9VKA **$29.97**

7 PC. BIT SET
- Contains 1/4" through 1" bits by 8ths

ITEM 03629-7VKA **$5.97**

CENTRAL MACHINERY

BLOW OUT PRICE!

10" PLANER

- 2 HP, 110V, 1 phase, 11 amp, 8000 RPM
- 19" x 16-5/8" x 16" overall dimensions
- 5-1/8" working distance
- 10-1/8" x 9-1/8" feed table
- 2-blade cutter head
- 10-1/8" blade size

LIMIT 1

ITEM 32377-3VKA **$199.99**

Pittsburgh

LIFETIME WARRANTY

2 PC. 3/4" HEAVY DUTY PIPE CLAMP SET

Pipe not included. • 1-1/2" throat depth
- Handle screw operating range: 2-1/8"
- Weight: 2-7/16 lbs.

ITEM 31255-5VKA **$2.93**

RADIAL ARM RASK SAW KIT

RADIAL ARM SAW KIT

Award-winning patented design features easy setup with most 7-1/4" and 7-1/2" circular saws. Makes fast accurate bevels, rips, miters, and crosscuts. Ruggedly built and completely portable.

- Saw and table wood not included

Maximum miter & bevel: 45°; Crosscut: 12-3/4"; Length: 24"; Rip capacity: 15-3/4"; Height: 22";

ITEM 33576-2VKA **$49.95**

CENTRAL MACHINERY

SAVE $50

COMBINATION 6" x 48" BELT AND 9" DISC SANDER

1 HP, 110V, 16 amp, 3450 RPM, all ball bearing motor; Overall height: 40"; Table surface: 6-1/2" x 12-3/4"; Easy tension adjustment; Disc speed: 1720 RPM; Belt speed: 1280 FPM; Weight: 121 lbs.

ITEM 06852-5VKA **$149.99**

CENTRAL PNEUMATIC CONTRACTOR SERIES

RATED "10" BY WOOD MAGAZINE

18 GAUGE AIR BRAD NAILERS

Safety trigger, adjustable nailing depth, durable aluminum magazine, and easy jam clearance. Slides are high impact plastic.

- 100 brad maximum capacity
- 18 gauge brads • 55-95 operating PSI
- Stainless steel driver & cylinder
- 1/4" NPT inlet • Tool weight: 2-3/4 lbs.

ITEM 31308-2VKA **$49.99**

CHICAGO Electric Power Tools

25% MORE POWER!

13.2 VOLT, 3/8" KEYLESS CHUCK CORDLESS DRILL KIT

Variable speed, reversible; 0 to 600 RPM; 6 torque settings. Includes 6 pc. drill bit set, 6 pc. screwdriver bit set, charger, battery, keyless chuck, and carrying case

ITEM 33165-2VKA **$49.99**

REPLACEMENT BATTERY
ITEM 33214-3VKA **$24.99**

29 PC. HIGH SPEED STEEL DRILL BIT SET 1/16" to 1/2" by 64ths.
- 3/8" cutdown shanks

ITEM 02642-5VKA **$9.99**

CENTRAL MACHINERY

10", 2HP BENCH TABLE SAW

- Max. depth of cut @ 90°: 3"; @ 45°: 2-1/2"
- Motor: 2 HP, 115V, 60 Hz, 13 amp, 4500 RPM
- Blade sold separately

ITEM 32648-5VKA **$79.95**

10" SAW BLADE
- 40 Tooth carbide tips

ITEM 00529-5VKA **$8.97**

CENTRAL MACHINERY

5 SPEED BENCH DRILL PRESS

- 2" stroke, 8-1/4" swing
- 1/2" chuck with key

1/3 HP MOTOR

ITEM 05901-6VKA **$49.99**

25 PC. BRAD POINT WOOD BIT SET
- Sizes: 1/8" through 1/2" by 64ths

ITEM 03376-6VKA **$8.95**

CENTRAL MACHINERY

INCLUDES STAND!

1 HP MOTOR

6" INDUSTRIAL RABBETING JOINTER

- Infeed table size: 22-1/2"
- Outfeed table size: 19-1/2"
- Motor: 1 HP, 110/220V, 4/8 amp, 4900 to 5900 RPM cutterhead speed
- Max. depth of cut: 3/8"

ITEM 30289-5VKA **$199.99**

LIMIT 1

CENTRAL MACHINERY

1" x 30" BELT SANDER

LIMIT 1

Remove the belt back plate and sand all types of curves and odd shapes.

- Motor: 1/4 HP, 2 amp, 60 Hz, 120V, 3450 RPM • Table: 5" x 5"

ITEM 07830-5VKA **$39.99**

MORTISING MACHINE

Make mortise and tenon joints in furniture, cabinets, and restoration. Fence with hold down clamp keeps workpieces steady. Includes fence, workpiece clamp, and 1/4", 3/8", and 1/2" mortising chisels and bits.

- 5" maximum work piece height
- Accepts .745" chisel shanks
- 59 lbs. shipping weight
- 3-1/2" swing
- 1/2 HP, 110V, 2.3 amps

CENTRAL MACHINERY

BUY NOW & SAVE!

ITEM 30036-5VKA **$179.99**

★ Within the 48 States / $2.95 handling on all orders

Order 24 Hours a Day/7 Days a Week
Most Phone Orders Shipped in 48 Hours

Call To Order or Ask for Free Catalog:
1-800-423-2567

DISCOVER NOVUS VISA MasterCard AMERICAN EXPRESS

Or Send Check or Money Order to: Harbor Freight Tools, 3491 Mission Oaks Blvd. Box 6010, Camarillo, CA 93011

Circle No. 46

Combo blade delivers smooth results quietly

Most 10" combination blades can't cut as smooth as my 40-tooth ATB (alternating top bevel) blade. So I avoid them unless I'm doing rough work such as cutting lumber for carpentry.

But was I surprised by the CMT 110-500 Maxi-Combo Blade. Not only is it the quietest blade I've used, (silicone-impregnated slots help keep the noise low) but it gave me excellent crosscuts and ripcuts in any material—pine, curly maple, and melamine-coated particleboard to name a few.

Most combo blades offer a flat-topped raker tooth followed by four ATB teeth. On the Maxi-Combo, the corners of the rakers have the top points ground off which leaves behind just a whisker of material that the ATB teeth slice off cleanly.

This blade won't cut across the grain as smoothly as a crosscut blade or rip as fast as a ripping blade. But if you don't like to change blades, or can only afford one blade, this one outperforms any combination blade I've seen.

—Tested by Dave Henderson

PRODUCT SCORECARD

CMT 110-500 Maxi-Combo blade

Performance	★ ★ ★ ★ ★
Price	$67.90 ppd.
Value	★ ★ ★ ★ ★

CMT Tools, 310 Mears Blvd., Oldsmar, FL 34677. Call 800/531-5559.

Workbench gives you three-way performance

Not many three-in-one tools actually perform three tasks well. But I found that the Dust Eliminator Workbench gave me outstanding results as a workbench, a downdraft sanding table, and an air-filtration unit.

As a workbench, the Dust Eliminator supports workpieces with a rock-solid 1¾×30×54" hard-maple top. The cabinet features rounded corners, invisible welds, and durable powder-coated paint. Heavy-duty casters allow you to easily move this 250-pound unit around the shop. Thanks to a 20' electrical cord you can position the bench almost anywhere in your shop. And you can plug two power tools into an electric outlet mounted on the cabinet's side.

When you want to sand, place the workpiece over the 16×20" PVC-plastic grid centered in the top. Dual squirrel-cage blowers inside the cabinet pull 930 cubic feet per minute (cfm) of air through a three-stage filter system that traps dust particles down to 0.5 micron in size. The filter system includes a 2" polyester filter for removing large dust particles, a non-woven pleated secondary filter, and six fiberglass bag filters at the bottom .

Finally, the Dust Eliminator can be turned on at any time and used to filter room air. This eliminates the fine dust particles that remain suspended in your shop's air for long periods of time.

During my tests, I cleaned the primary and secondary filters by shaking and blowing the dust out. This takes only a few minutes, and in each case the filters returned to the same level of efficiency as when they were new. The first two filters did such a good job that the bag filters never needed cleaning.

The cabinet exhausts air out the sides. This draft can stir up a lot of dust and debris on the floor. To prevent this, I recommend that you order the optional diffuser (about $90) that turns this airflow into a gentle breeze. Another option, a $29 manometer, measures the static pressure inside the cabinet and tells you when the filters need to be cleaned. But I found I could tell when the filters need changing by simply inspectiong them. Even though the Dust Eliminator Workbench costs nearly $800, a separate bench, air-filtration unit, and downdraft table of this quality and capacity would cost you over $2,000.

—Tested by Bob McFarlin

PRODUCT SCORECARD

Dust Eliminator Workbench

Performance	★ ★ ★ ★ ★
Price	$789 until Jan. 1, 1996
Value	★ ★ ★ ★ ★

Wood Mark, P.O. Box 211434, Bedford, TX 76095. Call: 800/845-4400.

Continued on page 34

TWO TOP-RATED JOINTERS. ONE SOURCE. TO ORDER, PHONE TOLL FREE: 1-800-235-2100

WILKE'S TOOLBOX

FREE SHIPPING TO THE 48 STATES ON PORTER-CABLE AND DEWALT TOOLS

PORTER+CABLE
PROFESSIONAL POWER TOOLS

ITEM#	DESCRIPTION	PRICE
330	Speed-bloc® 1/4 sht. Finish Sander	$ 60.
9352VS	3 x 21 Belt Sander, w/dust bag & steel case	$169.
362	4 x 24 Belt Sander, w/dust bag	$205.
410	Betterly™ Underscribe Trimmer	$149.
444	*New* Profile Sander–tool only	$ 88.
9444	Same as above but with case & access.	$114.
447	7 1/4" Saw – 15 amp w/electric brake	$138.
843	*New* #447 Saw w/blade on left side	$138.
505	1/2 Sheet Sander	$120.
550	Pocket Cutter Kit w/steel case	$179.
556	Plate Joiner Kit, tilt fence, case	$138.
690	1 1/2 hp Router–10 amp	$138.
691	1 1/2 hp D-handle Router – 10 amp	$153.
5116	16" OMNIJIG® Dovetail Machine	$258.
7116	24" OMNIJIG® Dovetail Machine	$294.
7310	Laminate Trimmer 5.6 amp	$ 95.
97355	5" HD Ran. Or. Sander–case, dust kit	$152.
97366	6" HD Ran. Or. Sander–case, dust kit	$158.
7499	*New* Cutout Tool–3.4 amp	$ 69.
7536	2 1/2 hp Router – production base	$203.
7539	3 1/4 hp Plunge Router, V/S, 15 amp	$269.
7549	Top Handle Bayonet Saw, 4.8 amp	$134.
7700	10" Miter Saw w/ LASERLOC®	$339.
7800	*New* Drywall Sanding Unit	$327.
7810	*New* Professional Vacuum System	$249.
9840	Cordless Drill Kit, 9.6 V, 2 Batteries	$160.
9653S	Cordless Drill Kit, 12V, 2 batt.	$167.
97310	Trim Kit, case and 4 bases	$197.

DEWALT
High Performance Industrial Tools & Accessories

ITEM#	MODEL	DESCRIPTION	PRICE
1660	DW421	5" Palm R.O. Sander w/dust	$ 79.
1610	DW431	3" x 21" V/S Belt Sander	$184.
1825	DW318K	Top Handle Jigsaw w/case	$159.
1828	DW306K	Recip. Saw V/S w/case	$159.
1550	DW610	1 1/2 HP Router	$149.
1552	DW615	1 1/4 HP V/S Plunge Router	$159.
1555	DW625	3 HP V/S Plunge Router	$274.
1425	DW675K	3 1/8" Planer w/case	$162.
1264	DW682K	Biscuit Joiner Kit	$219.
1085	DW962K-2	9.6V Cordless V/S Kit, 2-batt.	$179.
1088	DW972K-2	12V Cordless V/S Kit, 2-batt.	$189.
1091	DW991K	14.4V Cordless, 1-batt.	$199.

OTHER TOOLS AVAILABLE FROM STOCK

Prices subject to change without notice.
Shipped F.O.B., York, PA.

BRIDGEWOOD®
Model BW6R
All cast iron machine on enclosed steel stand. Surface ground tables. 1 hp, 1 ph motor. Manual switch. 6" x 45 1/2" table size. 1/2" rabbeting capacity. 3-knife cutterhead. Center mounted fence tilts 45° left and right.
$399.00

WILKE
MACHINERY COMPANY
MACHINERY POWER TOOLS

BOTH JOINTERS HAVE DELUXE FENCES THAT TILT TO 45° INWARD AND OUTWARD

THREE POSITIVE STOPS

GENERAL®
Model 1180-1-M1
All cast iron machine on enclosed steel stand. Ground table surface. 3/4 hp, 1 ph motor. Manual switch. 6" x 42 1/2" table size. 1/2" rabbeting capacity. 3-knife cutterhead. End mounted fence tilts 45° left and right.
$950.00

JT9/95

VISIT OUR SHOWROOM:
One block west of I-83 exit 11.
Hours:
Monday through Thurday 8 am – 5 pm,
Friday 8 am – 7 pm,
Saturday 9 am – noon.

TO RECEIVE A CATALOG FAST, SEND $2.00 TO:
WILKE MACHINERY COMPANY
3230 Susquehanna Trail, York, PA 17402
FOR TECHNICAL SERVICE CALL: 1-717-764-5000

Circle No. 96

Like Having A Lumberyard Right In Your Shop!

Craftsmen everywhere are using the low-cost Woodmaster to **bring in welcome extra cash** and to **save** on all their lumber needs. You can, too!

With the big 18-inch Woodmaster or the standard 12-inch model, you can quickly convert low-cost, rough lumber into valuable finished stock. You can turn out perfect picture frame moldings, crown, bed and base moldings, tongue & groove, door and window trim . . . all popular patterns...any custom design.

You can do custom work for friends, neighbors, lumberyards, picture framers, home remodelers, hobby shops and businesses.

Because it takes just seconds to convert a $2 rough board into $10 worth of finished trim, you can see why so many Woodmaster owners enjoy substantial extra incomes!

Variable Speed Makes The Difference!

Just a twist of the dial gives you perfect control for planing, sanding or sawing...from 0 to 1,000 cuts per inch. Creates mirror-smooth molding with no sanding required!

Here's what Woodmaster owner L. C. Griffin of Los Angeles writes: *"The shop test article in **Wood Magazine** that said they loved your Variable Feed Rate is what sold me. They were right."*

Call or write today for free facts on how you can try this **American-Made** tool in your own shop for one full month. Easy terms.

Woodmaster's Quick-Change Molding Head lets you create custom moldings from any stock. Choose from over 250 standard trim and picture frame patterns...or design your own!

Power-fed sanding speeds production and improves the quality of your work. No more waves or cross-grain scratches. Separate sanding head installs in just minutes.

New ripsaw attachment lets you gang-rip with power feed in a fraction of the time it takes for multiple hand-fed passes on an ordinary table saw.

CALL TOLL-FREE
1-800-821-6651 Ext. PW83

FREE FACTS

☐ **YES!** please rush me your **FREE** Information Kit plus details on your **30-DAY FREE TRIAL GUARANTEE!**
WOODMASTER TOOLS, INC., DEPT. PW83
1431 N. TOPPING KANSAS CITY, MO 64120

Name _____

Address _____

City _____ State _____ Zip _____

SECO
DUST COLLECTORS

▼ UFO-40
1HP, 500cfm, one 4" inlet, 1.5ft capacity bag, 40lbs.
~~$150~~ $120

UL CSA CE LR76429

◄ UFO-90
1HP, 610cfm,one 4" inlet, 2.5ft capacity bag, 75lbs.
~~$190~~
$167

~~$288~~
$255
UFO-101 ►
2HP, 1182cfm,two 4" inlet, 5.24ft capacity bag,135lbs.

1-800-CAL-SECO. ORDER ONLY
SECO INVESTMENTS COMPANY
WOODWORKING DIVISION
145 W. Hillcrest Ave., San Bernardino, CA92408
Tel:(909)889-1799 Fax:(909)885-1799

Circle No. 91

41 Years of Service
The Woodworkers' Store®
Hardware, Wood, Tools & Know How

Q: Where can I find a solid brass **Jewelry Box Tray Support**?

A: Try page 30 of our new full color catalog featuring over 4000 hard to find products for woodworkers... and it's **FREE!**

Call 1-800-403-9736 Today!

FREE! CATALOG

Dept. 53115

Circle No. 965

SHOP TESTED
PRODUCTS THAT PERFORM

Continued from page 32

The A-Line-It checks tools for pinpoint accuracy

Most manuals show you how to use a framing square to set up and align tools. But framing squares were never designed for this. So I was eager to try the A-Line-It, a machine-setup device that measures runout, concentricity, and other dimensional differences as small as .001"—about one-third the thickness of a human hair.

The A-Line-It consists of a dial indicator, an 11" mounting bar, and a 6¼" miter-slot bar. Two springs in the miter-slot bar hold it firmly in any ¾"-wide slot. With the dial indicator extended horizontally, you can check runout in a router bit, or tablesaw blade as shown in *Photo A*. Plus you can check the blade-to-miter-slot alignment and the alignment of the fence to the miter slot.

Other dial-indicator setup tools will do the same thing, but you can reconfigure the components of the A-Line-It to perform many different tasks. You can tilt it 90° from horizontal and extend the tip of the dial indicator below your saw's throat opening to check runout directly on the arbor. To check the height of your jointer knives, mount one end of the miter-gauge bar on the end of the mounting bar and secure the dial indicator pointing down in the middle of the miter-gauge bar as shown in *Photo B*. In this position, you also can check outfeed tables, extensions, and tablesaw or router inserts to ensure that they're flush.

For drill-press work, the A-Line-It comes with a ½×3½" steel pin that screws into any of the 12 holes in the mounting bar. Chuck the pin in your drill press, and rotate the chuck. The dial indicator will tell you whether or not the table is set 90° to the quill and help you square the fence to the table. The A-Line-It also includes a set of 22 different tips for the dial indicator, and a large spring-tensioned aluminum nut for checking sawblades for variations in flatness that may cause runout.

In my tests, I found that all of the machine-ground components fit together perfectly. The finish on the two anodized-aluminum bars appears flawless.

The rough draft of the instructions gave me enough information to set up and use the tool in every configuration, and reconfiguring the A-Line-It never took more than a minute or two. I also checked the A-Line-It against a $160 dial-indicator-based fixture I built to test tools for *WOOD*® magazine, and I got identical readings. In short, the A-Line-It is deadly accurate and gives you more ways to measure accuracy at less cost than any tool on the market.

—Tested by Bob McFarlin

PRODUCT SCORECARD

A-Line-It	
Performance	★ ★ ★ ★ ★
Price	$99.95
Value	★ ★ ★ ★ ★

In-Line Industries, 661 S. Main St., Webster, MA 01570. Call 800/533-6709.

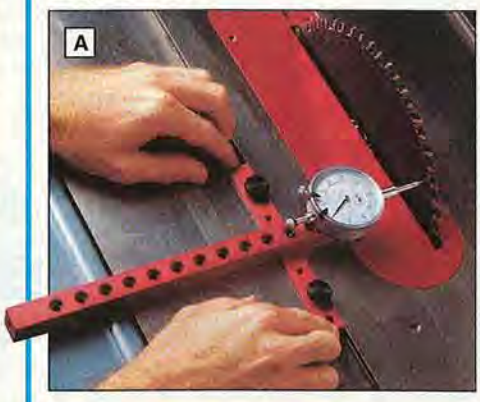

RYOBI

TFD222VRK	12V Cordless Drill Kit w/2 Batteries	$135
450	Oscillating Spindle Sander	157
AP12	12" Portable Planer	389
BT3000	10" Sliding Table Saw w/Stand	499
JP155	6 1/8" Jointer Planer	299
RE600	3 HP Variable Speed Plunge Router	219
BE321	Electronic 3" x 21" Belt Sander	139
TS254	10" Miter Saw	182
SC162VS	16" Variable Speed Scroll Saw	163

DAVID WHITE

ALTP6-900	18X Auto Transit Level Package	$469
LP6-20	20X Sight Level Package w/Case	197
LTP6-900	18X Level Package	348

DEVILBISS

SDS100E4G	1 HP Oil-less Pancake Compressor	$229
AFN5	1" to 2 1/2" Finish Nailer Kit	239

SENCO AIR NAILERS

SLP20	5/8" to 1 5/8" Brad Nail Kit	$276
SKS-L	7/8" to 1 1/2" Narrow Stapler	267
SFN1	1" to 2" Finish Nailer	307
SFN40	1 1/2" to 2 1/2" Finish Nailer	379
SN60	Full Round Head Framing Nailer	439

FREUD

132B	13.2V Cordless Drill Kit w/2 Batteries	$199
2000E	3 1/4 HP Variable Speed Router w/Guide Plus $20 Mail-in Rebate. Before Rebate	203
94100	5 Piece Router Bit Door Making Kit	179
97100	3 Piece Router Bit Cabinet Set	139
SD308	8" Carbide Stack Dado Set	117
SD508	8" Carbide Super Stack Dado Set	165
JS100	Biscuit Joiner w/Case Plus $30 Mail-in Rebate. Before Rebate	157
JS102	Biscuit Joiner w/Tilt Fence & Case Plus $30 Mail-in Rebate. Before Rebate	177
TR215	8 1/2" Compound Slide Miter Saw	349

RELIANT

DK11	3/8"- 1 3/16" Electric Nailer w/Case	$139
DD211	3/4" - 1 1/2" Air Finish Nailer	189
DD37	15" Planer w/Stand	865
NN912X	12" Planer w/Stand	379
EE30	3 HP Wood Shaper	795
DD136	Hollow Chisel Mortiser	199
DD90	14" Band Saw Closed Base 1HP	295
NN720	1 HP Dust Collector	189
NN820	2 HP Dust Collector	279
NN830	3 HP Dust Collector	449
DD126	1 1/2 HP 6" x 48" Belt 12" Disc Sander	399
DD79	3/4 HP 6" x 48" Belt 9" Disc Sander	179
FR400	Edge Banding Machine	174
DD18	18" 3 Speed Band Saw	649
DD606	Universal Surface Grinder	158
MMMT	Miter Trimmer	118
DD221	Coil Roof Nailer	299
DD330	1/2" Crown Air Stapler Gun 1/2"-2" Leg	177
DD340	1" Crown Stapler Gun 3/4" to 1 1/2" Leg	189
DD400	Horizontal Drum/Flap Sander w/Stand	299
DD130	13" Belt Sander	979
DD34	1 1/2 HP Shaper	395
NN910	10" Planer	279
DD55	3/4 HP 12 Speed Floor Drill Press 5/8 Chuck	259
DD65	10" Table Saw	129
EE166	16" Band Saw	449
RT89	Router Table	149

MISCELLANEOUS

3380	ELU Biscuit Joiner	$197
636	Fein Detail Sander w/Case	174
PM2700D	Rousseau Porta Max Stand	215

MAKITA

2708W	8 1/4" Bench Top Table Saw	$329
3612	3 HP Router w/Electric Brake	215
5090DW	9.6V 3 3/8" Cordless Saw Battery & Charger	144
6095DW	9.6V 3/8" Cordless Drill w/2 Batteries	145
6200DW	9.6V Driver Drill w/Battery & Case	114
6211DWE	12V 3/8" Driver Drill w/2 Batteries & Case	173
98202	Water Stone Blade Sharpener	237
LS1011	10" Compound Miter Saw with 60T Carbide Blade	527
LS1211	12" Slide Compound Miter Saw	790

MILWAUKEE

3751	3/8" Close Quarter Drill	$147
4071	12V VSR Drill Kit w/ 3/8" Keyless Chuck, Case, and 2 Batteries	179
6527	Super Sawzall	172
67671	24 Pc. Screw Shooter Kit	137

PORTER CABLE

345	7 1/4" Saw Boss	$104
352	3" x 21" Belt Sander	164
352VS	3" x 21" Variable Speed Belt Sander	171
360	3" x 24" Belt Sander	197
362	4" x 24" Belt Sander	207
447	7 1/4" Framer's Saw w/Electric Brake	137
505	1/2 Sheet Finish Sander	124
511	Lock Installation Kit	157
556	Biscuit Joiner w/Case & Tilt Fence	135
690A	1 1/2 HP Router	138
691	1 1/2 HP Router w/D Handle	153
693	1 1/2 HP Plunge Router	174
695	1 1/2 HP Router-Shaper w/Table	219
5116	16" Omni Jig Dovetail System	267
7116	24" Omni Jig Dovetail System	293
7335F	5" Random Orbit Sander w/Shroud	134
7336F	6" Random Orbit Sander w/Shroud	139
7403	Variable Speed Power Paint Remover	162
7518	3 1/4 HP 5 Speed Router	267
7539	3 1/4 HP 5 Speed Plunge Router	269
7549	Top Handle Jig Saw	133
7810	Wet/Dry Vacuum	259
843	7 1/4" Left Hand Saw w/Electric Brake	134
9444	Profile Sander w/Case	114
9447	7 1/4" Framing Saw w/Case	167
9637	Variable Speed Tiger Saw w/Case	130
97310	Laminate Trimmer Kit	199
9853S	12V Driver Drill, 2 Batteries & Case	163

DELTA

14650	1/2 HP Hollow Chisel Mortiser	$279
17900	16 1/2" Floor Model Drill Press	379
22540BP	12" Planer w/Extra Set of Knives	380
28180	8" 2 Wheel Band Saw	155
28283	14" 3/4 HP Closed Base Bandsaw	759
34444	10" Contractor Saw w/Jet Lock Fence	627
34445	Contractor Saw w/30" Unifence	799
34447	Contractor Saw w/52" Unifence	897
34897N	52" Unifence Only	299
36070	10" Power Miter Saw	161
36210	10" Sidekick Compound Miter Saw	247
36220	10" Compound Miter Saw	199
36250	10" Slide Compound Miter Saw	487
36275	8 1/4" Sidekick Builder Saw	259
36540	10" Bench Top Table Saw	167
36751	10" Cabinet Saw w/30" Unifence	1125
36752	10" Cabinet Saw w/52" Unifence	1199
36755	10" Cabinet Saw w/Jet Lock Fence	949
36820	3 HP Special Edition Unisaw w/52" Unifence	1599
37070	6" Variable Speed Bench Jointer	255
37190	6" Deluxe Jointer w/Stand	434
40640	20" Variable Speed Scroll Saw	299
43505	Router/Shaper	287
46700	12" Variable Speed Wood Lathe	447
50175	"Kick Stand" Work Stand	169

MISPRINTS ARE RARE, BUT SUBJECT TO CORRECTION

SAVE Wholesale Woodworking Tool Division™

TO GET ADVERTISED PRICES MENTION DEPT. # WD125

Prices in this ad valid thru 12/15/95

FREE FREIGHT!

Order Line 1-800-873-6355

M-F 9-9, Sat 9-4 E.T. Closed Sunday. P.O. Box 9117, 135 American Legion Hwy., Revere, MA 02151

SAVE Wholesale Woodworking Tool Division™

P.O. Box 9117
135 American Legion Hwy.
Revere, MA 02151

Our "No-Frill Service" guarantees you the lowest possible price on brand name power tools.

FREE FREIGHT!

- We sell only items listed in this ad. All Items are in stock and available for shipping. No other items are available.
- All goods sold under manufacturer's warranty only.
- Dealer and individual orders accepted.
- We accept MasterCard, Visa and Discover. Checks accepted by mail only. No delay in shipping.
- No COD's.

BERGER

	All Berger Level Outfits Include: 8 foot Rod, Metal Tripod, & Case	
103	One Person "Laser One" Laser and Detector	$979
135	Standard Level Outfit	229
190B	Builder's Level Outfit	299
200B	Builder's Transit Level Outfit	329
300B	Transit-Level Outfit	475
SAL1	Contractor's Auto Level Outfit	429

BOSTITCH

S32SX-KIT	7/32" Crown Finish Stapler	$167
BT50KIT	Brad Nailer Kit, Oil, Case & Nails	207
N60FN-2-KIT	Finish Nailer Kit, Oil, Case & Nails	369
BT35KIT	Brad Finish Nailer Kit, Oil, Case & Nails	169
N80SB1	Framing Stick Nailer	329

BOSCH

1194VSR	1/2" V.S. Reversing Hammer Drill	$149
1587VS	Top Handle "Clic" Jig Saw	149
1584VS	Barrel Grip "Clic" Jig Saw	149
1613EVS	2 HP Variable Speed Plunge Router	199
3283DVSK	5" Random Orbit Sander, Case & Accessories	114
B4050	Compact Reciprocating Saw	113

CAMPBELL HAUSFELD

HV2000	HVLP Spray Finishing System	$199
NS289000	28° Stick Framing Nailer	288

DEWALT

675K	3 1/8" Planer w/Case	$159
682K	Biscuit Joiner Kit	217
705	12" Compound Miter Saw	357
930K2	12V Cordless Trim Saw Kit w/2 Batteries	199
935K2	14.4V 5 3/8" Trim Saw w/2 Batteries	249
944K	9.6V Drill w/2 Batteries	134
972K	12V Driver/Drill w/2 Batteries	188
991K	14.4V Driver/Drill w/Case	199

SKIL

1605	Biscuit Joiner w/Case	$134
3400	10" Table Saw	184

HITACHI

C8FB2	8 1/2" Slide Compound Miter Saw	$547
NR83A	16d Full Head Nailer	399
C10FC	10" Compound Miter Saw	239
C10FS	10" Slide Compound Miter Saw	739
NV45AB	Coil Roofing Nailer	434

MLCS
Professional Woodworking Products

SAVE 55% REGULAR VALUE OVER $150.00!

Make Beautiful Raised Panel Doors
with your 1/4" or 1/2" Router, or with your 1/2" or 3/4" Shaper.

Professional production quality router bits and make it quick and easy to produce matching rails and stiles. The panel raising bit with ball bearing guide makes the raised panel perfect every time!

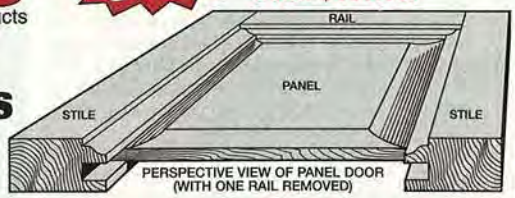

PERSPECTIVE VIEW OF PANEL DOOR (WITH ONE RAIL REMOVED)

SIZE & FORM	ITEM #	PRICE/SET
1/4" Shank Router	#1301	$69.95
1/2" Shank Router	#1302	$79.95
1/2" Shaper	#1303	$99.95

*Supplied With Ball Bearing

RAISED PANEL ROUTER BIT
*2" Large Diameter (1/4" Shank)
*3 -1/2" Large Diameter (1/2" Shank)
4-5/8" Large Diameter (Shaper)

***REVERSIBLE COMBINATION RAIL & STILE BIT**
(For making matching rails and stiles in raised panel doors, etc.) Works with stock from 11/16" to 7/8".

• PROFESSIONAL PRODUCTION QUALITY GUARANTEED

1/4" SHANK CARBIDE TIPPED ROUTER BITS

FREE SHIPPING IN CONTIGUOUS USA

ROUND OVER BITS
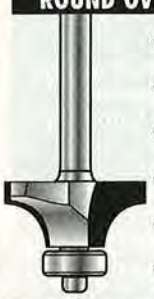
#1314. . . . . $11.00 (1/8" Radius)
#1315. . . . . $11.00 (3/16" Radius)
#1394. . . . . $13.00 (1/4" Radius)
#1316. . . . . $14.00 (5/16" Radius)
#1369. . . . . $15.00 (3/8" Radius)
#1370. . . . . $17.00 (1/2" Radius)

TONGUE & GROOVE BITS
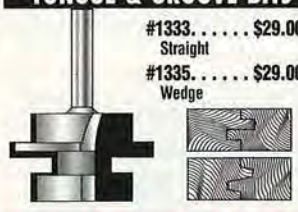
#1333. . . . . $29.00 Straight
#1335. . . . . $29.00 Wedge

FLUSH TRIM BITS

#1337 . . . . . $8.50 3/8" Diameter, 1" Cutting Length
#1338 . . . . . $9.50 1/2" Diameter, 1" Cutting Length

PATTERN/FLUSH TRIM

#1340 . . . . . $15.00 1/2" Diameter, 1" Cutting Length
#1341 . . . . . $17.00 3/4" Diameter, 1" Cutting Length

OGEE RAISED PANEL BIT

#1353 . . . . . $29.95 2" Large Diameter

BULL NOSE BITS

#1330. . . . . $16.00 1/2" Dia. of Circle
#1331. . . . . $21.00 3/4" Dia. of Circle

QUANTITY DISCOUNT!
When ordering three or more bits deduct $1.00 each!

45° CHAMFER BITS
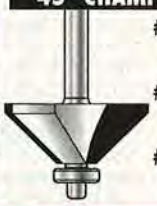
#1404 . . . . $14.00 1" Lrge Diameter, 3/8" Cutting Lngth
#1405 . . . . $16.00 1 1/2" Lrge Diameter, 5/8" Cutting Lngth
#1406 . . . . $22.00 1 3/4" Lrge Diameter, 1" Cutting Lngth

ROMAN OGEE BITS

#1415. . . . . $18.00 5/32" Radius
#1416. . . . . $20.00 1/4" Radius

14° DOVETAIL BITS

#1409. . . . . $7.00 1/2" Large Diameter
#1410. . . . . $9.50 3/4" Large Diameter

RABBETING BITS

#1411. . . . . $15.00 3/8" Depth, 1/2" Height, 1 1/4" Lrg. Diameter
#1412. . . . . $17.00 1/2" Depth, 1/2" Height, 1 1/2" Lrg. Diameter

TECHNICAL HELP & EXPERT ADVICE • CUSTOMER SERVICE BEFORE & AFTER SALE • FREE 40 PAGE CATALOG

Editors Top 10 Woodworking Tools
American Woodworker ISSUE 20

MERLE
The **ADJUSTABLE CORNER CLAMP©**

- Almost *NO* capacity limitation
- Forces a Frame into a perfect square
- Even jointing force at *ALL* corners
- Adjustable, uniform clamping pressure
- Great for wide cabinet frames (for center or edges)
- Aluminum & Steel construction

Reg. $39.95
Item #1420 **SALE $24.95**

ROUTER SPEED CONTROL

CONTROLS THE SPEED OF YOUR ROUTER! Gets the best results with the wood and bit you are using!

- Works with all routers 3-1/4" HP or LESS - 120V 15 Amp
- Full horsepower and torque at all speeds
- Gives your router a feature only available on routers costing hundreds of dollars!

Reg. $49.95 . . . . . **SALE $34.95**
Order Item #1304

METAL CASE & BIT HOLDER INCLUDED!

25 PIECE BRAD POINT DRILL BIT SET

Drill accurate holes in wood, plastics & composites.

Bit sizes from 1/8" to 1/2" by 1/64" increments. Bits are deep fluted to clear chips quickly.

Reg. $34.95 . . **SALE $18.95**
Item #1413

WOOD STORAGE BOX INCLUDED!

22 PC TAPERED DRILL BIT SET

For exceptional thread "bite".

Includes sizes 5, 6, 7, 8, 9, 10, 12, seven matching countersink heads with adjustable stop collars, & Allen key.

Item #1414 Reg. $34.95. . . . . **SALE $22.95**

FAST & EASY

Special

BISCUIT JOINING SET

5/32" Slot Cutter- 1/4" Shank & 250 #20 Biscuits

"Biscuit Joining with your Router", Instructional sheet included.

Reg. $35.00. . . . **SALE $29.95**
Order Item #1385

To Order By MasterCard, VISA, Discover, or American Express
CALL TOLL-FREE, 7 DAY —24 HOUR ORDER SERVICE
Or Send Check To: MLCS, Ltd., P.O. Box 4053 DA, Rydal, PA 19046 ©1995

1-800-533-9298

Circle No. 1251, 1350, 2250

THE MAINE COURSE

New Englander Bob Newton serves up a full menu of advice and insights on running a successful custom-woodworking business.

Not everyone can claim success in two completely unrelated careers, but Yarmouth, Maine, resident Bob Newton can. A law graduate from Duke University, Bob first set up practice as a trial lawyer in Denver, Colorado, in 1971. There, his cases involved personal injury accidents and medical legal issues. And though his income at the time provided a comfortable living, he found that his work severely cut into his family life.

On top of that, Bob told us during our visit with him at his very own Yankee workshop, "I had a personal need for a creative outlet, and a need to work with my hands." During a particularly trying holiday season in 1981, Bob found himself asking if the proverbial Fast Lane was not without its share of potholes. With agreement from his wife, Carol, Bob moved his

Continued

Custom woodworker Bob Newton shows off a few of his prized creations. The carriage house behind him closely resembles the one he used for a shop until it was partly destroyed by fire in 1992.

Print this article

THE MAINE COURSE

family to Yarmouth in search of the good life. Bob and Carol found Maine attractive for several reasons. From previous visits, they had fallen in love with the woodsy countryside, rocky seacoasts, and charm of New England small-town life. The Yarmouth location seemed like the perfect place to raise a family. (Bob and Carol's children include Matthew, Anthony, Anne-Marie, Joseph, and Thomas, aged six to 20.) And it seemed like the ideal place to give woodworking a try. Indeed, that's when his hobby-level woodworking experience blossomed into a full-bodied new career, namely, owning and running a successful custom-woodworking business.

But the breakaway, in this case, was not overnight, nor without a serious sacrifice in income. You just don't open a woodworking shop and enjoy instant success, not when you lack professional experience. His years of lawyering allowed him to save enough to see him through the hard times. Bob solved his experience problem the old-fashioned way—by apprenticing under a master craftsman, one of the very best!

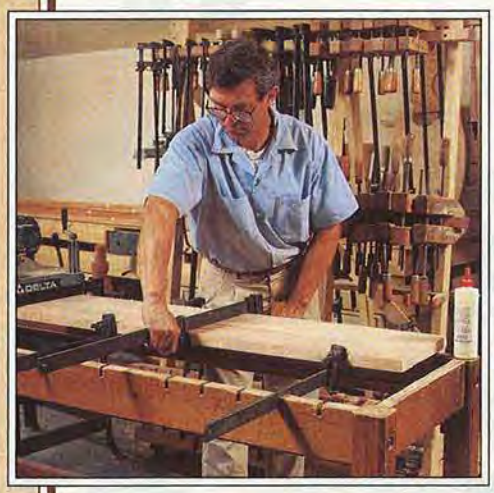

One of Bob's more interesting inventions, his glue-up table, *left*, folds up neatly and stores on a wall when not in use in a clamping operation.

Bob's shop contains over 1,500 square feet of work space. The machines use three-phase electricity to save on operation costs.

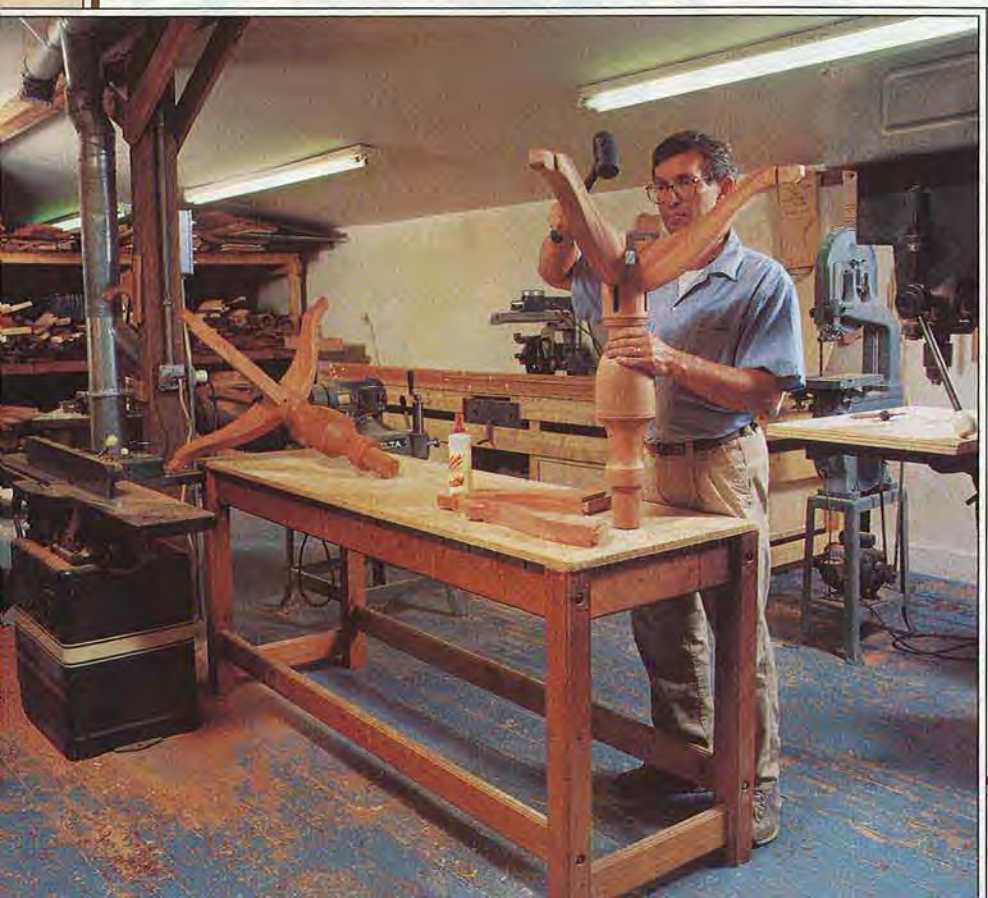

Enter Thomas Moser

During the time of the move, Bob wrote to renowned New England Shaker furnituremaker Thomas Moser, expressing his interest in working for him. Surprisingly, Moser wrote back. Over time, Bob convinced the reluctant furnituremaker to take him on board. "Since Gloucester, Maine [where Thomas Moser lives], is only 20 minutes away from Yarmouth, I more or less camped out on his porch until he came around."

Thus began Bob's five-year apprenticeship. "At the time, Tom was building a lot of custom stuff," Bob recalls. "He began advertising in the *New Yorker* magazine; just like that his woodworking went mainstream."

When Moser's woodworking business took off, so did the nature of the work done in the shop. "The work process of the shop became more production-like," says Bob, whose interest was in custom—not production—work. It was time to strike out on his own. But his master had taught him well. "From Tom, I learned a lot about Shaker, as well as other 18th- and 19th-century furniture designs. I learned mortise and handcut-dovetail joinery, too. And mostly, how to market."

The scary part: going it alone

January of 1986 saw Bob open his own shop, working out of the carriage house attached to his 1840s two-story home in Yarmouth. And though Tom Moser had kindly sent some custom work his way, it wasn't until Bob sold his first pieces of furniture—two desks—on speculation that he knew he had a shot at succeeding as a custom woodworker.

Later, in 1988, Bob experimented with speculation sales again by placing a clock (with the management's permission) in a Boston hotel lobby. When the clock sold,

he realized that this, too, may be a profitable avenue to pursue. After this aptly named "Crossroads" clock, Bob developed and began selling a complete line of tall, wall, and shelf clocks. According to Bob, "Everybody needs a bread-and-butter line to pull them through the tough times."

Today, Bob's business chugs along nicely, and has expanded to include two additional helpers, one full-timer and one part-timer. Due to a 1992 fire in the carriage house, Bob relocated to a 1,500 square foot shop just a few doors from his home.

Getting the word out

The demographics of Bob's customers mostly include people living within a 25-mile radius of his shop; 30 percent of his business comes from the greater Boston area two hours away. "My timepieces, however, have sold nationwide, as far away as San Francisco," says Bob. Generally, his clientele tends to be wealthy older couples and young couples with professional careers. "Only about 10 percent of my business is from commercial clients."

This last group, Bob notes, makes for a hard sell; they seek out the rock-bottom price. "I once lost a job for ten small conference tables to a volume producer who came in with a lower bid and a simpler design. My courting efforts went for naught."

To reach his customers, Bob's marketing strategies take on many forms. "To lend an aura of seriousness and professionalism to my work, I've had brochures developed that include photographs of my pieces and a price list." These Bob uses for blind mailings to interior design and architectural firms. He again uses them when following through on a second strategy—placing speculaton pieces at such places as a furniture show, show home, or hotel lobby where the right people will see them. "I don't place a piece where I have to pay, such as a gallery," Bob says.

This timepiece, *above,* one of Bob's best sellers, is a contemporary version of a 19th-century cottage clock.

Featuring several storage components, —pigeonholes, drawers, and secret compartments—Bob sells this cherry desk/secretary, *left,* for around $8,500.

Occasionally, the craftsman places an ad in the local newspaper to help maintain a presence. But like many custom woodworkers, Bob gets much of his business through word of mouth.

Cares and costs that won't go away

Along with filling customer orders with finished furniture pieces—the fun part—Bob must look after the burdensome costs that typify many small businesses. Included below are the items making up his operating costs:

- *Building rental*
- *Labor costs*
- *Electricity, heating, water, and sewage*
- *Taxes, specifically, in-state retail sales tax, personal taxes on equipment, assessed valuation on personal property, and employment tax*. Bob has found a degree of help, though. "If you have payroll, withholding can foul you up. So I use a payroll service to take care of deductions and issue checks [for workers]. Right now, that service costs me $16 a week for two employees," he explains.
- *Commercial, general, and property liability insurance* (to protect the building and its contents from such things as fire loss.) "Here," Bob says, "I include machinery, and something someone may not readily think about—work in progress, and the templates that might be used for future work."

Bob also pays *premiums* on a one million dollar product liability policy should someone become injured while using a furniture piece he made and sold. He also carries *workman's compensation* to cover worker injuries incurred in the course and scope of their employment with him.

Finally, he picks up the tab for *automobile insurance for the vehicles* that he owns and uses in the business. "All of these things must be taken into consideration when charging a customer for your products," Bob advises.

Quality design: job one

Bob's furniture designs have roots that run deep and wide. "I try to be up to speed on a design," he says. "I own every furniture book there is." Before taking pencil to

Continued

THE MAINE COURSE

Bob's Calista table, *left,* draws its ribbed support system from a Norwegian antique design.

paper, though, he spends ample time researching work by the masters, people like Sam Maloof and George Nakashima, and by poring over many examples of period pieces.

In addition, he's careful not to impose his own tastes on furniture pieces his clients may want. "I have a real reverence for people's own aesthetic," he says .

What style does his furniture fit into? Something called "American style." The way Bob sees it, his work contains elements of the Arts and Crafts style, as well as the clean economy of design found in Shaker furniture. His signature accents include splines in contrasting woods, inlay work, mortise and tenon joinery, and handcut dovetails. Above all, each piece Bob produces must—by his own criteria—be a "sensible design, well executed, with beautiful materials."

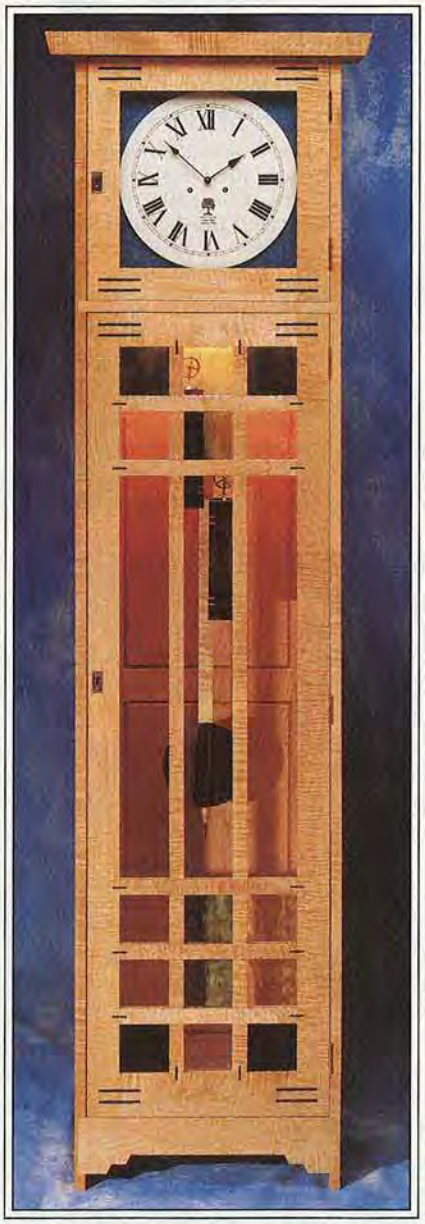

Bob's curly-maple Crossroads II clock features mortise-and-tenon joinery accented with bars of Macassar ebony.

Poised for the long haul

Besides his design concerns, Bob runs a smart shop. For popular designs of which he may make several, he keeps an inventory of patterns and jigs. Many of the latter see construction duty in a variety of furniture pieces.

Bob moves furniture orders through a well-organized set of stages (see *right*) while continually soliciting new business. Few days pass without interesting challenges. He enjoys tackling a new custom design, and getting lost in the project. "You lose a sense of time and space—it's a Zenlike experience that is personally transforming," says Bob.

His biggest kick? According to our craftsman, "taking something from raw material to a finished product that exceeds the expectations of your customer."

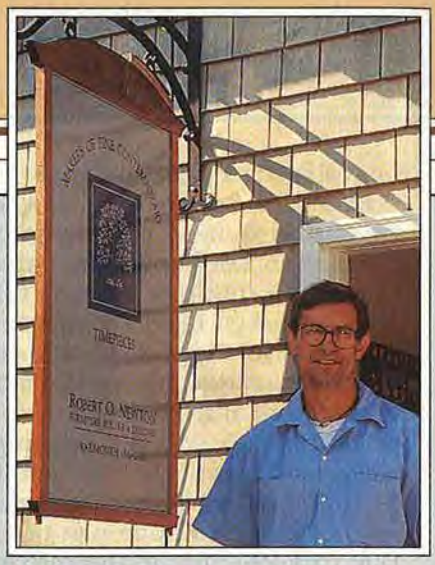

Brochures, professional photos of his work, and an attractive sign convey Bob's business as a successful one.

Bob's Grand Plan For Customer Satisfaction

Customer service stands at the top of Bob's priority list. We asked him to describe his working relationship with clients. His approach fits neatly into eight hardworking stages:

Stage 1: INITIAL CONTACT
Bob receives a phone call or letter from someone interested in having him make a furniture piece. He responds quickly and sets up the first meeting.

Stage 2: FIRST MEETING
Bob meets face-to-face with his customers and finds out what they want. "Many times, people don't know exactly," Bob says. He asks how the piece is to work, discusses the setting for the piece, reviews photos or pictures of sample pieces, and has the customers decide on the wood type.

Stage 3: DETERMINING PRICE
After the first meeting, Bob figures a "range of costs with options." He does this by taking into account the design, meeting time, building labor, overhead, and profit. "I typically want 25 percent profit out of a piece that I make for someone," Bob says. He calls or writes his customers with

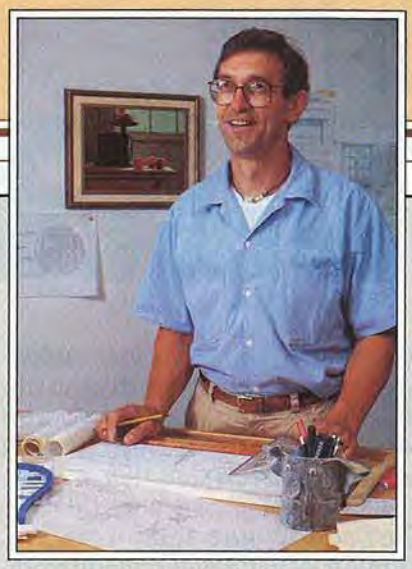

Original designs require research, creativity, and, as Bob says, "listening closely to what the customer wants."

Bob invites his customers to drop in the shop during the building of their ordered piece. That helps them decide on such things as hardware and special finishes.

the product costs, in part to develop "a clarity of understanding." Bob claims, "More times than not, the customers scale back."

Stage 4: SECOND MEETING

With a rough price decided on, Bob meets with his customers to flesh out the design details. He refines the costs and requests a 50 percent deposit that initiates the custom furniture order.

Stage 5: DESIGN WORK

Turning to his drafting table, Bob draws the working shop plans for the commission. Included are details, patterns, section views, and elevations. He numbers the drawings and refers to them as the "official documents" in the product invoice.

Stage 6: FINAL MEETING

During this get-together, Bob will "button down" any lingering questions the customers may have. They look at stain samples, select hardware, decide on door-panel profiles and other construction and design details.

Stage 7: CONSTRUCTION

At last, Bob and his crew turn on the tools and begin building the commission. "I keep an open-shop policy," comments Bob. "Customers can drop in unannounced and see how their piece is coming. If they change their mind and want a curved profile, I do that for them."

Stage 8: DELIVERY TIME

Sometimes, Bob delivers a furniture piece; other times, his customers will choose to pick it up. "To hand off a project is delightful. People are often shocked that it's better than they imagined."

After customers have had a commission for awhile, Bob writes or calls them and asks how the piece is performing. "People appreciate this," he says. Bob offers a lifetime warranty for all of his furniture pieces and deals with defects right away. "You don't want to let a little problem become a big one. Customer service is also a way of marketing," **he advises.**

Written by Jim Harrold
Photogarphs: Bob Hawks, Matt Spaulding

This handsome writing desk, one of Bob's early pieces, was designed specifically for a professional writer and poet.

Bob's Best Tips for Aspiring Woodworkers

- Don't enter the custom-design business without extensive woodworking experience.
- Expect to take several years to be fully up and running.
- Don't underestimate a job, and always be candid with people about costs of the finished product.
- Be sure you have the personal support of your family.
- Be conservative in your expectations of the business. Not everybody cares about wood and all its intricacies the way you might.

SPOTLIGHT ON JOINTER

Many experienced woodworkers feel that they can't do without a jointer. That's because you can't beat one for fast and accurate edge and surface preparation, and other operations such as chamfering a board. But unlike the trusty hand plane it replaces, a jointer can really bite if you're not careful. Here are some tips that will save you a Band-Aid or two.

More affordable than ever, jointers have become commonplace in home woodworkers' shops. Now, you can select from four-, six-, and eight-inch jointers in a range of prices. No matter the size or the price, though, all hand-fed jointers can cause injury.

Accidents primarily occur when the fingers or hand slip off the workpiece and into the knives of the cutter head. Improper feeding and adjustment also can cause accidents. So before you use a jointer, read the manual that came with it, then practice the following advice gleaned from the *WOOD®* magazine shop, the National Safety Council, and industry sources.

For safe jointing, use pushblocks to keep hands and fingers out of the cutters' way.

Get ready, get set

As with other power woodworking equipment, using a jointer dictates wearing safety glasses and ear protection. To avoid being suddenly pulled into the cutter head, do not wear gloves; remove all jewelry; tie back long hair; tuck in loose clothing; and roll long sleeves above the elbow. Also heed the following advice:

- Use only extremely sharp knives on a jointer.
- Never make adjustments to the fence, table, or anything else when the machine is running.
- Be sure to tightly secure the fence and table-adjustment locks before jointing stock.
- Before pushing stock against the knives, let them reach full speed.
- Position yourself to the side of the infeed table to avoid any possible kickback of the workpiece. Never stand directly at the end of either table.
- Perform all operations with the guard in place.
- Do not *back* the workpiece toward the infeed table.

Security in a safe setup

You wouldn't change the bit in your router without unplugging it, so give your jointer the same respect. Always unplug the machine before adjusting the knives. And there's more.

- Proper setting means that the opening between the table and the cutter head should be just large enough for the knives to clear. Also set the knives so that they are parallel to the outfeed

Print this article

SAFETY

table and all at the same height.

• Lock the adjustable outfeed table securely in position. If vibration should cause it to drop, the knives will seize the stock and possibly your hands, too.

• Your jointer should be fitted with a cutter guard that self-adjusts out of the way when hit by the stock. Make certain that the return spring has enough tension to return the guard all the way to the fence no matter where the fence is set.

• Some older jointers, and at least one current model, do not have a guard behind the fence. As shown in the photo *right*, this exposes the spinning knives when you set the fence closer to you and can lead to accidents. Check with the manufacturer for the availability of an after-market fence if you own such a jointer.

Watch what you cut

No matter how confidant you feel with your jointer, never perform any "freehand" operations that do not require the use of the fence to position and guide the work. Keep these points in mind, too:

• To keep hands away from the knives, use a pushstick and pushblock to hold the stock. For shorter lengths of stock (keep in mind, never less than 12" long), always use a pushstick or block that requires two hands. On longer stock, use a pushstick on the end to prevent fingers from slipping off the wood and into the revolving cutterhead.

Beware of exposed cutters on some older jointers not fitted with a guard behind the fence.

• Avoid heavy cuts that may jam the cutterhead: Remember to take off no more than 1/16" on softwoods and even less on hardwood stock.

• Never joint or bevel workpieces less than 3/4" wide or 1/4" thick. And always use a hold-down or pushblock on wood narrower than 3".

• Don't plane wood on the jointer that is thinner than 1/2", and use hold-downs or a pushblock on wood thinner than 3".

• To avoid chatter and excessive chipout, always joint with the grain, as shown in the drawing *below left*.

• Never run end-grain stock against the knives because it can shatter. Knotty wood also requires extreme care because knots can rip loose from the board and jam the knives. And be sure to check the workpiece for nails and other foreign objects that will damage the cutter head. Due to the hard adhesives, jointing plywood edges will nick and gum up the knives.

• When surfacing stock on a jointer, keep both hands on top of the workpiece, never on the front or back edge, and use a pushblock. When halfway through the cutting pass, shift pressure on the stock to the part already cut. Pressure on the stock's back end can cause it to be pulled down into the knives.

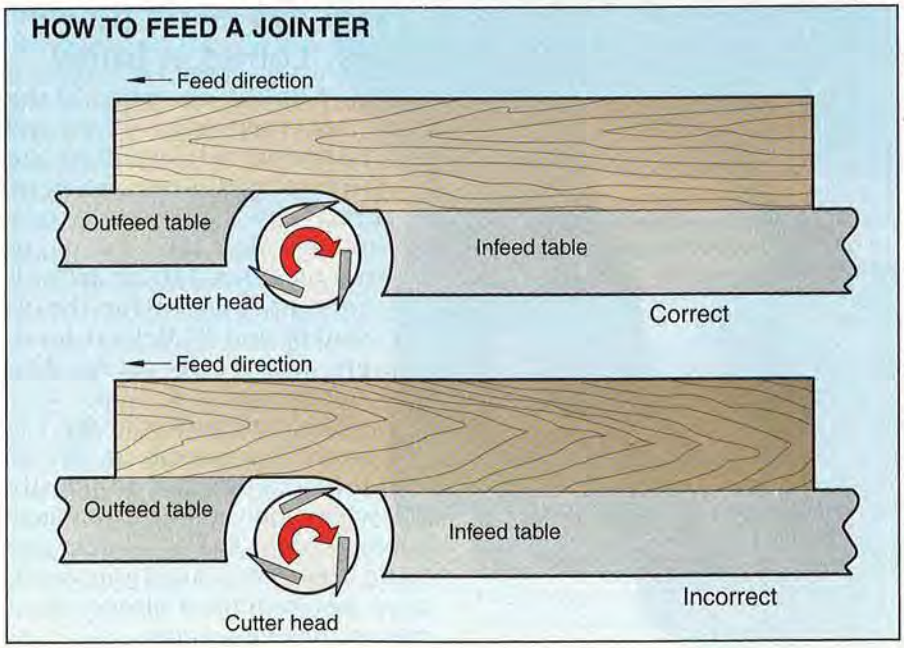

Photographs: John Hetherington
Illustration: Roxanne LeMoine

JOINTERS UNDER

Good bargains can prove elusive in the world of woodworking machinery. Often, trying to save a few dollars means sacrificing quality. If, however, you are considering buying a jointer, we have some good news for you.

We rounded up 17 jointers from 12 manufacturers and measured the critical components for accuracy, tried out the table elevations and adjustments, and jointed a lot of wood. To focus our efforts, we narrowed our selection to 6" and 8" jointers that cost under $1,000. We consider a 6" jointer the minimum size you need for most woodworking projects. And the machines above the $1,000 mark skyrocket in price.

The good news is that every machine proved capable of flattening and straightening stock. We found plenty of differences, though. Most had to do with convenience and personal preferences. Now, let's find out what these differences mean to you.

Print this article

1 Tables: look for length and adjustability

A jointer has infeed and outfeed tables, collectively called the bed, for workpieces to ride on. The longer the bed, the longer the workpiece you can straighten on it. The 42-46" beds found on most 6" jointers will handle stock up to about 6' long. (Benchtop jointers offer much shorter beds, but also several unique features. To find out more about these, see *page 47*.) For stock up to 8' long, you're better off using an 8" jointer with a 65-67" bed.

The lengthwise flatness of all the tables fell within the .010" limit we set as a benchmark for accuracy. Jointing accuracy also depends on having tables that are *parallel* end to end. All of the machines except the Sears and the benchtop models enable you to adjust both the infeed and outfeed tables, as shown in the illustration on *page 46*, to obtain two parallel surfaces. With these adjustments, we could fine-tune these jointers to within about .004" of parallel—plenty accurate for any woodworking task.

Sunhill bolts cast-iron table extensions to the infeed and outfeed tables on both of its jointers. These increase the total bed length by 7" and add about 18" to the length of the stock you can joint on them.

2 Motors: extra power comes in handy

With the exception of the benchtop units, which use universal motors, all of the jointers in the test are powered by induction-style motors. Most can be wired to run on either 110- or 220-volt current, except for the 8" Sunhill and 8" Reliant jointers, which only accept 220-volt current.

The extra power of the 1.5- and 2-hp motors on the 8" jointers comes in handy when you've got a lot of face-jointing to do. The 6" jointers also will, however, face-joint well; they just require a slower feed rate and shallower cuts.

$1,000 Eight things to know before you buy

3 Table adjustments: choose the type that suits your style of work

Jointers come with either levers or handwheels to adjust the height of the tables. See the illustrations on *page 46*. You can raise and lower a heavy cast-iron table quickly with a lever, but levers don't give you micro-fine control. Your shoulder and arm do the lifting. Handwheels give you fine control, but the torque comes from your wrist—hard work if you've got arthritis or an injury that impairs your grip.

Handwheels make the most sense for outfeed table adjustments. You only set the height of the outfeed table when you change the knives, and this adjustment must be accurate. As for the infeed table, some woodworkers change this setting several times a day. A lever can keep this from becoming a tedious chore.

On the infeed table, levers work best if you use a jointer to true-up rough stock. If you're more likely to use the jointer to precisely dimension stock or clean up saw marks, then go with the more-precise handwheel design.

Among machines with handwheels, AMT and Jet put the wheels on the front of the cabinet (rather than under the tables) for easier access. We found the wheels in this location to be easier and more comfortable to use than the other handwheels.

Mounting handwheels on the front of a jointer makes them much easier to grasp and turn.

4 Fences: the best machines give you accurate repeatable stops

Jointer fences come in two basic types, center-mount and side-mount. Only the General, Sears, and Woodtek models use a side-mount fence.

Except for the Delta, the remaining jointers come with one of two types of center-mount fences. The Bridgewood, Jet, and Reliant 6" jointers tilt on a curved bracket as shown *below left*. The fences on both Enlons, both Grizzlys, both Sunhills, and the 8" Reliant tilt on a hinged steel rod and slide in and out on a pair of cast-iron plates, as shown *top right*. The only difference we found is that the curved brackets provide a slightly smoother tilting action. Of the 17 machines, only the Delta 37-190 and the General provided stops with enough stiffness to accurately lock the fence into place at 90° and 45° every time. The stops on the remaining machines had enough play in them to occasionally throw the fence off 0.5° or so. We don't consider this a big drawback. You don't change this setting often, and the error can be corrected by locking the fence with a square held firmly to it and the outfeed table.

Consider also the direction the fence tilts. Most of the fences tilt out, except for the Delta 37-190, the General, both Reliants, and the Woodtek. Their fences also tilt in, thus trapping the board during bevel or chamfer cuts. This trapped cut gives you an extra margin of safety in that the workpiece can't slide down off the fence and expose your hands to the cutterhead.

Side-mounted fences, like the one on this General jointer, control the tilt and sliding mechanism from one handle.

A hinged rod controls the tilt mechanism on the Sunhill jointer.

The fence on the Jet jointer tilts on a curved bracket bolted to the backside of the fence.

To maintain an accurate stop, the Delta fence uses a spring-loaded pin that locks into a tapered groove in the collar attached to the large rod on the fence.

Continued

JOINTERS

5 Guards: these should work smoothly

Except for the General and the Sears, all of the jointers in our test came with substantial cast-aluminum guards. General uses an even beefier cast-iron guard, and Sears uses plastic.

To cut rabbets, you can remove the guards on the front edge of the jointers, as shown *upper right,* except for the Sears, General, and benchtop jointers. The General allows you to rabbet the edges of boards, but not the faces. The Sears and benchtop jointers do not include a rabbeting ledge.

We liked the guard tensioning system on the Enlon jointers the best. As shown *lower right,* you simply loosen a set screw in the front edge of the guard boss, and turn the knob on top until you have the proper tension.

On the Reliant and Sunhill jointers and the Grizzly 8", you reset the spring tension by turning a small roll pin around the pivot shaft of the guard. Turning the roll pin around enough to tension it causes the pin to bite into your fingers and this might be impossible for someone with an impaired grip. The remaining jointers employ a knurled knob on the underside of the guard boss that you twist to tension the spring. These knurled knobs go easy on the hands, but require some trial and error to set the tension right.

Jointers cut rabbets faster than routers, but you must remove the guard first.

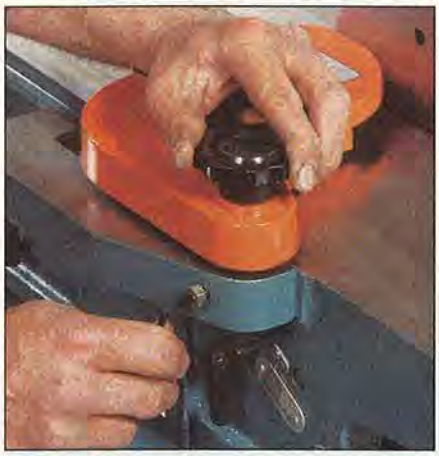

To set the guard tension on the Enlon jointers, all you have to do is turn the knob and tighten the set screw.

6 Knives: some install easier than others

Most of the knives were well-sharpened and properly set at the factory. We also found all the cutterheads balanced and detected no significant runout.

To enable you to set the height of the knives, the AMT, Delta, and Sears jointers use jack screws that lift them to the proper height. The General employs an older system that forces you to pry the knives up, or use a magnetic knife-setting jig while you tighten the gib bolts. On the remaining machines, springs push the knives up when you loosen the gib bolts. In comparing the springs and jack screws, we found that the jack screws make it easier to fine-tune the height of the knives.

One innovation that aroused our curiosity was the four-knife cutterhead offered on the 8" Sunhill jointer. We found the edges and faces joined on this machine to be slightly smoother than any of the others. This we attribute to the extra knife. And when given the torture test—face jointing a wide board with a deep cut—the 8" Sunhill required less feed pressure and gave us less chatter than any other jointer. The only drawback to this system is that you'll pay 25 percent more come sharpening time and 25 percent more when you have to replace the knives.

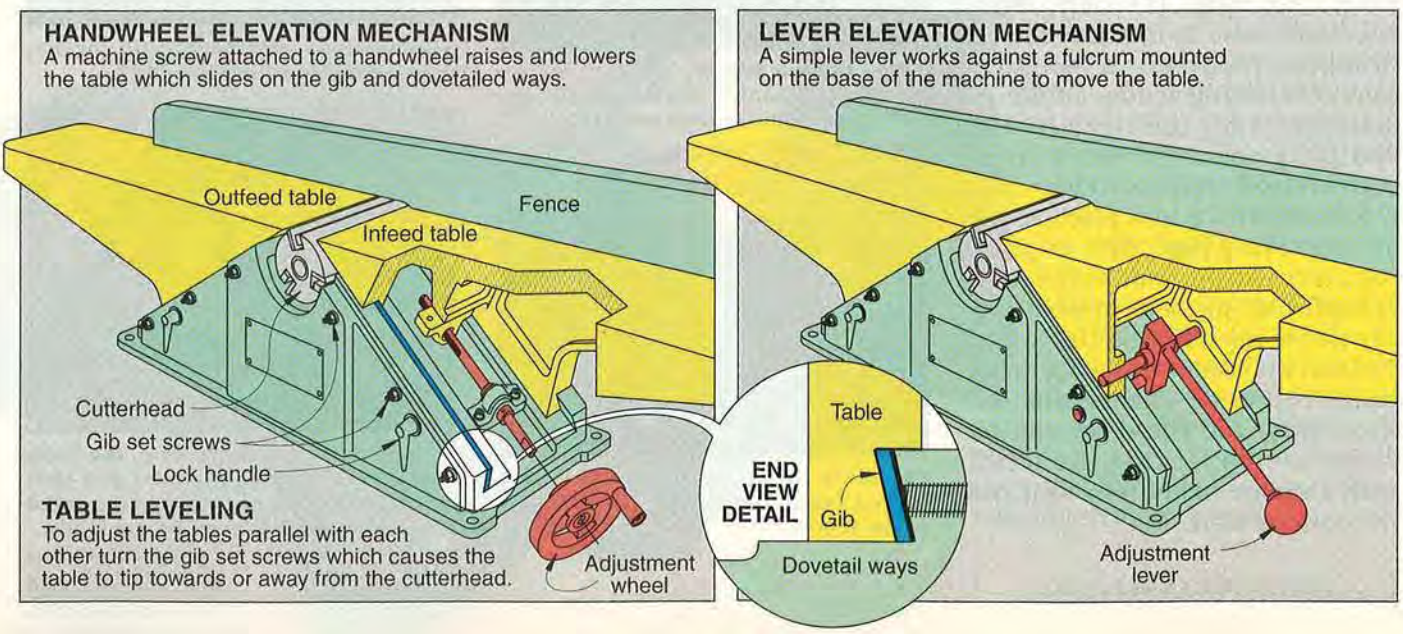
HANDWHEEL ELEVATION MECHANISM
A machine screw attached to a handwheel raises and lowers the table which slides on the gib and dovetailed ways.
Outfeed table
Fence
Infeed table
Cutterhead
Gib set screws
Lock handle
TABLE LEVELING
To adjust the tables parallel with each other turn the gib set screws which causes the table to tip towards or away from the cutterhead.
Adjustment wheel
LEVER ELEVATION MECHANISM
A simple lever works against a fulcrum mounted on the base of the machine to move the table.
END VIEW DETAIL
Table
Gib
Dovetail ways
Adjustment lever

7 Stands: legs provide balance on rough floors

If the floor of your shop is rough or uneven, you may want to purchase a jointer with four legs such as the Delta 37-190 and Sears jointers. (AMT offers a hybrid of two sheet-metal panels open on each end.) The enclosed-cabinet stands on the rest of the jointers work fine on a smooth floor, but require shimming to remain steady on an uneven floor.

Enclosed stands do a better job of corralling woodchips and protecting the motor, pulleys, and belts from dust. Delta's jointer, however, includes a shroud for the motor and pulleys, and a chip chute in front. The narrow opening on the chip chute tends to clog when you're running a lot of stock through at one time, but the chute also includes an attachment that allows you to hook it up to a dust collector.

8 Manuals and assembly: good instructions take the frustration out of setup

No manual will make a jointer cut better, but if you're not familiar with knife-setting or table-adjustment operations, look for a jointer with a good manual. The chart on *page 49* shows which manuals are thorough, clearly illustrated and easy to understand.

The Delta and the General (and both benchtops) were set perfectly right out of the box. The rest required minor adjustments, mostly to get the tables parallel. The Delta, General, Jet, Sears, and Woodtek jointers come prewired which saves you that step.

In setting up these machines, we encountered only four problems. The stand on the AMT jointer came with misaligned bolt holes, one of the knives on the Grizzly 8" jointer measured .004 above the rest, and the infeed table on the Reliant 8" jointer required substantial tightening of the gib screws to bring it into alignment. None of these problems took more than an hour to diagnose and correct. We also traced a vibration problem on the 8" Enlon to an out-of-round pulley, which the company replaced.

BUYING MACHINERY BY MAIL

What to know before you phone

Most of the jointers we tested come from mail-order catalogs. These machines offer you good value, but note that some prices do not include shipping. If you live near a mail-order company with a showroom, you may be able to haul a machine home yourself, saving on the freight costs. If not, shipping a 400-pound jointer may cost up to $150, depending on how far you live from the warehouse.

You also should ask mail-order companies about warranties, availability of spare parts, and the return policy. When something breaks or wears out on a tool purchased locally, you can get a replacement part from a full-service dealer immediately or within a few days. If you can't install the part yourself, a technician will do it for you.

Most mail-order companies also support their equipment with replacement parts. But to get a part fixed or replaced requires that you ship the part back first. The turn-around time may take several days or longer, and you'll have to install the part yourself. If you aren't mechanically handy or don't want to wait for a mail-order part, you may be better off buying from your local dealer.

BENCHTOP JOINTERS

More convenience, but less capacity

If you work in a too-small shop and don't need to straighten long stock, a benchtop jointer may offer you the best solution. The Delta 37-070 and the Ryobi JP155 differ considerably from the rest of the floor-standing behemoths we tested, but they deliver good results within their limitations.

Powered by universal motors, both jointers spin their two-knife cutterheads up to three times as fast as jointers with induction motors. Both models also offer variable speed: the Delta runs from 6,000 to 11,000 rpm, and Ryobi spins at 8,000 to 16,000 rpm. All universal motors create a lot of noise, so ear protection is mandatory.

To set the knives on these jointers, you use jack screws. Clamp bars and through bolts hold the knifes to the cutterheads. A convenient cutterhead lock holds the knives at top dead center. Of all the knife setting systems, these prove the easiest to work with.

Where benchtop jointers fall short is their capacity. With a bed length of 30" for the Delta and 28" for the Ryobi, neither can straighten edges on boards longer than about 4'. Depth of cut is limited to ⅛" on the Delta, 3/32" on the Ryobi.

As far as differences between the two benchtop jointers go, we preferred Delta's taller fence: 4½" versus Ryobi's 3"-high fence. But we also liked Ryobi's smooth stainless-steel outfeed table better than the cast-aluminum table from Delta. The Ryobi weighs less: 26.8 pounds compared to 35 pounds for the Delta, and Ryobi's faster top speed delivers smoother results and less tearout on wood with difficult grain such as birdseye.

Continued

JOINTERS

6" JOINTERS

AMT 4124

Bridgewood BW6R

Delta 37-190

Enlon EN3104

General 1180-1-M1

Grizzly G1182

Jet JJ-6CS

Reliant DD39C

Sears 23221N

Sunhill CT150

Woodtek 801-589

8" JOINTERS

Enlon EN 3105

Grizzly G1018

Reliant DD40

Sunhill CT200

BENCHTOP MODELS

Delta 37-070

Ryobi JP155

Our Picks

Of the 6" jointers, the General stood out as a clear winner. We found it precise, balanced, smooth, and flawlessly finished. If you are watching your budget, however, the Delta 37-190 offers nearly identical performance at a much lower price and got our vote as the best value in this category. But, with a few adjustments, the rest of these jointers will cut

	MANUFACTURER	MODEL	VOLTAGE	AMPS (1)	MOTOR: HORSEPOWER	MOTOR: CUTTERHEAD SPEED (RPM) (2)
6" JOINTERS	AMT	4124	110/220	12/6	.75	5,000
	BRIDGEWOOD	BW6R	110/220	14/7	1	4,500
	DELTA	37-190	115/230	13/6.5	.75	4,800
	ENLON	EN3104	110/220	14/7	1	5,000
	GENERAL	1180-1-M1	110/220	10/8	.75	4,200
	GRIZZLY	G1182	110/220	13/6.5	1	4,800
	JET	JJ-6CS	115/230	12/6	.75	4,500
	RELIANT	DD39C	110/220	14/7	1	4,500
	SEARS	23221N	110	11	1	4,300
	SUNHILL	CT150	110/220	14/7	1	4,500
	WOODTEK	801-589	110/220	16/8	1	5,000
8" JOINTERS	ENLON	EN3105	110/220	20/10	1.5	5,000
	GRIZZLY	G1018	220	8	2	5,400
	RELIANT	DD40	220	12	2	4,500
	SUNHILL	CT-204L	220	12	2	4,500
BENCHTOP	DELTA	37-070	120	10	N/A	VS
	RYOBI	JP155	110	10.5	N/A	VS

NOTES:

1. Where two numbers are listed, the first indicates the amperage at 110 volts.
2. (VS) Variable speed (see text)
3. (JS) Jack screw, (S) Spring, (MS) Magnetic setting device

perfectly square edges and flat faces as well. If you are interested in these, we suggest you shop for the features you want and the best price.

In the 8" category, the Sunhill's four-knife cutterhead and table extensions merit the extra money you'll pay for this machine. In terms of value, the rest of these machines fall within $80 of each other and offer nearly identical performance. We give the edge to Enlon because it comes with a handwheel to adjust the outfeed table, nylon tabs that prevent the fence from dragging on the table surface, and a finger-friendly guard tensioning mechanism.

Of the benchtop jointers, we rated the overall performance as a tie. Your choice will depend on personal preferences. The Ryobi is lighter and easier to carry, but the Delta has a taller fence that improves stability when you edge-joint wide workpieces. The Delta costs $70 less than the Ryobi, giving it the edge in value.

Written by Tom Jackson
Product testing: Dave Henderson, Bob McFarlin
Illustrations: Kim Downing
Photographs: John Hetherington

JUDGING JOINTERS

	CUTTERHEAD		TABLES	TABLE ADJUSTMENTS			PERFORMANCE (4)										OVERALL SCORE (6)								
								EASE OF USE							QUALITY OF CUT										
	NUMBER OF KNIVES	BLADE SETTING SYSTEM (3)	OVERALL LENGTH (INCHES)	RABBETING LEDGE (YES, NO)	OUTFEED ADJUSTMENT (4)	INFEED ADJUSTMENT	ADJUSTMENT TYPE (INFEED/OUTFEED) (5)	ASSEMBLY	QUALITY OF MANUAL	FENCE OPERATION AND ADJUSTMENT	CHIP/DUST COLLECTION	FENCE ACCURACY	SCALE ACCURACY	EDGE JOINTING	FACE JOINTING	BEVELING	RABBETING	PERFORMANCE	VALUE	WARRANTY (YEARS) (7)	COUNTRY OF ORIGIN (MACHINE/MOTOR) (8)	WEIGHT (POUNDS)	LIST PRICE	SELLING PRICE (9)	COMMENTS
	3	JS	46	Y	E	E	FMW	P	P	G	F	G	G	E	E	E	E	7	8	*	T/T	235	$ --	$379*	We liked the front handwheels, but the stand required a lot of time to assemble.
	3	S	46	Y	E	F	HW/HW	F	F	G	G	G	G	E	E	E	E	8	9	1	T/T	279	--	399*	Smoothest-cutting jointer in the test. Excellent fit and finish.
	3	JS	46	Y	E	E	LV/HW	E	E	E	E	E	G	E	E	E	E	9	10	2	T/T	210	554	465	Excellent fence, top-notch quality. The best value in the 6" category.
	3	S	47	Y	E	E	LV/HW	F	F	F	G	G	G	E	E	G	E	8	8	1	T/T	230	--	380*	Easy guard tensioning. Can be ordered with levers or handwheels for table adjustments.
	3	MS	42.5	Y	E	E	HW/HW	G	G	E	G	E	E	E	E	E	F	10	8	2	C/C	370	1,295	985*	The fit and finish are flawless, the stops on the fence are deadly accurate, and the motor and pulley are perfectly balanced.
	3	S	47.5	Y	G	E	LV/LV	E	E	G	G	G	G	E	E	E	E	8	8	1	T/T	250	--	355*	Good value for the price. Lever adjustments on outfeed table are hard to set by yourself.
	3	S	46	Y	E	E	FMW	E	E	F	G	E	G	E	E	F	E	8	9	2	T/T	258	629	440	A basic, well-made jointer. The front-mounted handwheels make table-height adjustments easier than most.
	3	S	46	Y	E	E	HW/HW	F	F	G	G	E	G	E	E	F	E	8	8	1	T/T	215	--	340*	Lowest price 6"stationary jointer in test.
	3	JS	35.5	N	N/A	E	HW/NA	E	E	F	P	G	G	E	E	F	N/A	7	7	1	T/U	150	400	400	Joints wood as straight and flat as any, but the outfeed table is fixed, making knife adjustments time consuming.
	3	S	53	Y	E	E	HW/HW	F	F	G	G	G	G	E	E	E	E	8	9	1	T/T	250	--	389*	Nicely finished and detatiled unit. Cast-iron table extensions increase bed length by 7".
	3	S	42	Y	E	E	HW/HW	E	F	G	E	G	G	E	E	E	E	8	9	1	T/T	191	--	395	A good performer, similar to the General's rear-mounted fence design.
	3	S	65.5	Y	E	E	LV/HW	G	G	F	G	G	G	E	E	G	E	8	8	1	T/T	450	--	690*	Can be ordered with a 2hp motor and either a lever or a handwheel kit for table adjustments.
	3	S	65.5	Y	G	E	LV/LV	E	E	G	G	G	G	E	E	E	G	8	8	1	T/T	450	--	650*	The best price of all the 8" jointers.
	3	S	66	Y	E	F	HW/HW	F	F	G	G	G	G	E	E	E	G	7	8	1	T/T	450	--	729*	Required a lot of adjustment to get the tables parallel. Some rust on the tables.
	4	S	73.5	Y	E	E	HW/HW	F	F	G	G	G	G	E	E	E	G	9	9	1	T/T	500	--	859*	The four-knife cutterhead cuts aggressively and smooth. Cast-iron table extensions increase bed length by 7".
	2	JS	30	N	N/A	E	HW/NA	E	E	F	G	G	G	E	E	F	N/A	8	9	2	T/T	35	337	250*	Great for shops with limited space. Short bed won't straighten stock over 4' long.
	2	JS	30	N	N/A	E	HW/NA	E	E	F	E	G	G	E	E	F	N/A	8	8	2	J/J	27	380	319	Light, portable, and convenient. Short bed length won't straighten stock over 4' long.

4. E Excellent, G Good, F Fair, P Poor

5. (FMW) Front-mounted handwheel (HW) Handwheel (LV) Lever

6. Based on a scale from 1-10 with 10 being the highest possible score.

7. (*) 1 year motor - 10 years machine

8. (C) Canada (J) Japan (T) Taiwan (U) United States

9. * Price does not include shipping.

Who to call for more information:

AMT: 800/435-8665
Bridgewood: 800/235-2100
Delta: 800/438-2486
Enlon: 800/888-9697
General: 819/472-1161
Grizzly: 800/541-5537
Jet: 800/274-6848
Reliant: 800/877-7899
Ryobi: 800/525-2579
Sears: 800/377-7414
Sunhill: 800/929-4321
Woodtek: 800/645-9292

10 QUICK-AND-EASY SCRAP FROM WOOD® MAGAZINE'S

Woodworking jigs don't just happen. Most times they result from a woodworker trying to find an easier or more accurate way to accomplish a workshop task. At least that's been our experience in the *WOOD* magazine shop. On this and the following five pages, we show you how to make 10 of the most useful jigs from our shop. Here's hoping that you find them equally helpful in your woodworking.

1 Rock-solid outfeed table

If you've had much experience using commercially available roller-stands as outfeed tables, you're already well aware of their shortcomings. Namely, they like to tip over. And, unless you precisely align the roller(s), they tend to track the workpiece off to one side or the other. Add to that the cost and limited uses for roller-stands, and we believe there has to be a better way!

Here's a no-cost solution that works in conjunction with what we consider to be one of the most versatile tools for any workshop: a Black & Decker Workmate. Simply join two pieces of leftover ¾" plywood to form a "T" as shown *below*. If desired, you can apply paraffin wax or plastic laminate to the top surface, allowing your workpiece to slide more smoothly. Or, build the top surface from a piece of melamine-coated particleboard or kitchen countertop if you have a scrap handy.

OUTFEED TABLE

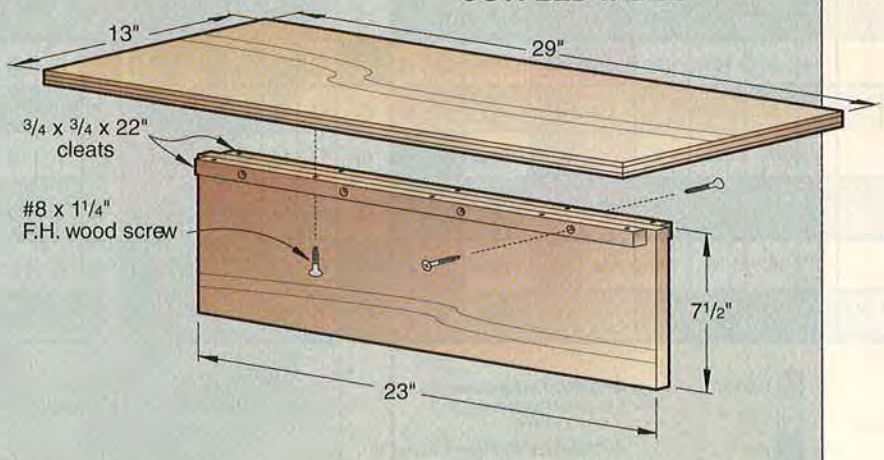

We're looking for a few good woodworking jigs

Do you have a jig or two you've developed during your years as a woodworker? If so, and if you think other *WOOD* magazine readers would benefit from seeing your idea, send us a snapshot or drawing of your jig and a brief description of what it does. We'll pay you $100 if we publish it in the magazine. What do you say? That extra money might come in handy the next time you spot a woodworking tool or product you'd like to buy.

Send your jig idea to:

My Favorite Jig
***WOOD* Magazine**
1912 Grand Ave.
Des Moines, IA 50309-3379

Print this article

WOOD JIGS

SHOP

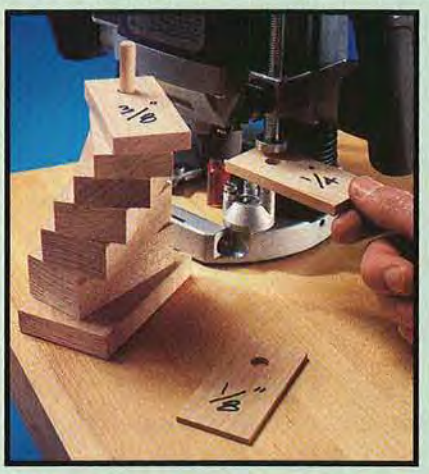

2 Multipurpose thickness blocks

Once you make a set of hard-maple thickness blocks, you'll wonder how you ever got by without them. Around our shop we use these to set the position of fences on tablesaws, router tables, and biscuit joiners. They also come in handy for adjusting the height of sawblades and router bits.

For example, the photo *left* shows how you can use them to set the depth of cut on your plunge router. Simply adjust the machine so the router bit contacts the surface the router sits on. Lock the router in place, and use the block of your choice to set the distance between the threaded depth-adjuster rod and one of the screw heads on the depth-stop turret.

We use a set of blocks that range from ⅛" to 1" thick in ⅛" increments. If you have the need, you can make thicker blocks, or produce them in finer increments, too. To make a set like ours, start with a 1×1½×36" piece of hard maple. Cut a 3"-long piece from one end for your 1" block. Then, run the workpiece through your planer until it's ⅞" thick. Saw off a 3"-long piece, and continue this process for making a block of each thickness.

With your blocks cut to thickness and length, mark each with its thickness. Drill a ⅜" hole into the blocks so they slip onto a ¼" dowel mounted to a base. You can stand the base on a work surface for portability, or attach it to a wall for saving space.

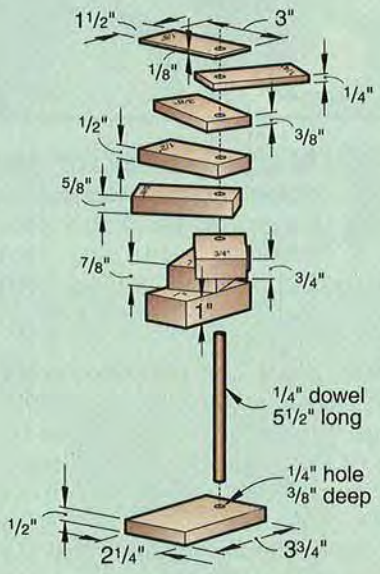

THICKNESS BLOCKS

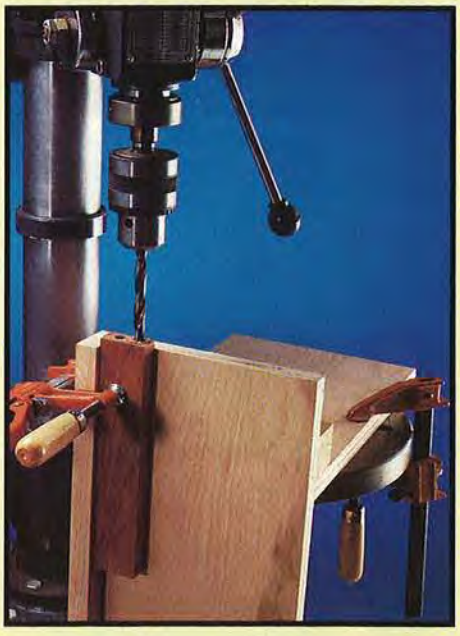

3 This jig takes the hassle out of boring into ends

Sure, it's a snap to drill into the faces or edges of most workpieces. But what about boring into the ends of long rectangular stock or dowels? This simple jig does the trick, with perfect precision and control.

To accommodate long stock with a benchtop drill press, mount the drill press at the end of your bench. Then, rotate its head to clear its work table and the workbench top.

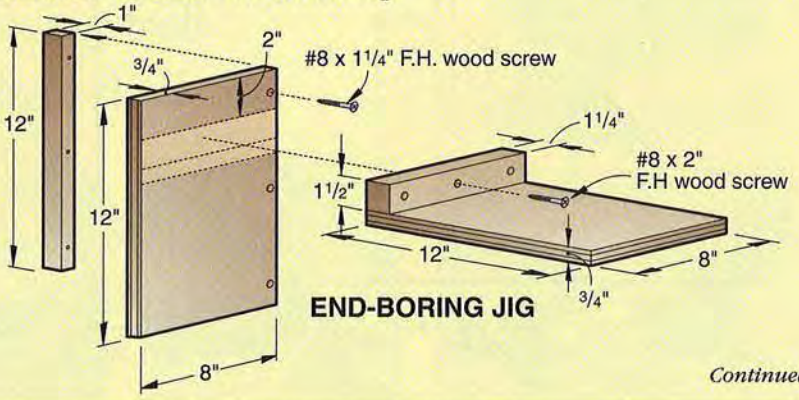

END-BORING JIG

Continued

10 QUICK-AND-EASY SCRAPWOOD JIGS

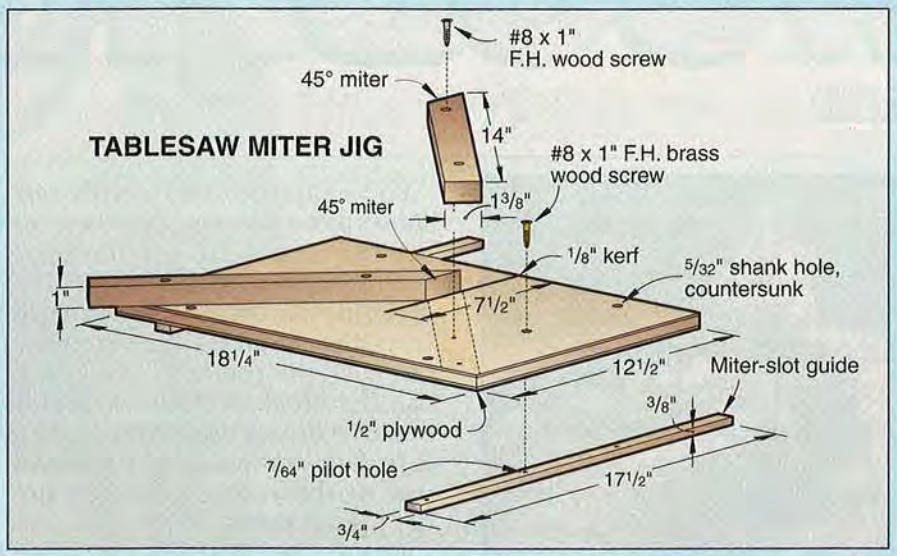

4 Are you ready for on-the-money miters?

Once you build this little beauty, you can rest assured that your miters will always match up. Here's how to put one together.

First, place one miter-slot guide into each slot on your saw table. Align the ½" plywood piece on top of the guides so its long edges are perpendicular to the miter slots. With the plywood resting on the tablesaw surface, drill 5/32" shank holes through the plywood and into the guides just far enough to mark their position. Remove the plywood and guides, and drill 7/64" pilot holes through the guides. Reposition these pieces on the tablesaw, and attach the guides with countersunk #8×1"-long brass wood screws. Drive the screws about halfway through the guides, and lift the assembly off the table. Drive the screws completely and sand off their protruding tips. Again, place the jig onto the tablesaw surface, turn on the saw, and cut a kerf that goes about halfway across the width of the plywood.

The key to this jig's accuracy is installing the miter fences precisely. The drawings *below* take you through the first two alignment steps. Use this process to temporarily attach each fence with two #8×1" screws. Test the fences for accuracy by cutting four sample pieces, each about 1" wide and 4" long. Hold them together with a rubber band and check for any gaps at the miters. Adjust the position of the fences as necessary by tapping them with a hammer. Once you're satisfied that the fences are in exactly the right position, permanently attach each of them with three #8×1¼" screws driven from the underside of the plywood surface (not shown on the drawing *above*).

Finally, it's a good idea to attach adhesive-backed, 100-grit sandpaper to the fence faces. This will help hold your workpieces steady during cuts.

INSTALLING THE MITER FENCES

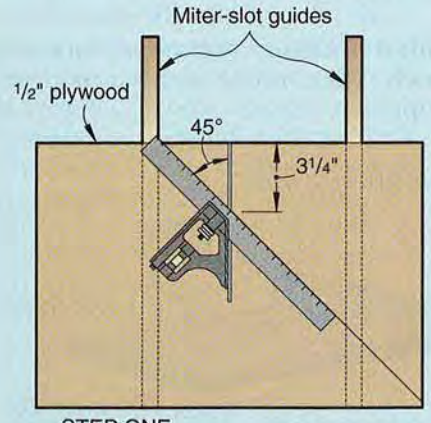

STEP ONE
Align combination square with saw kerf. Mark a 45° line as shown.

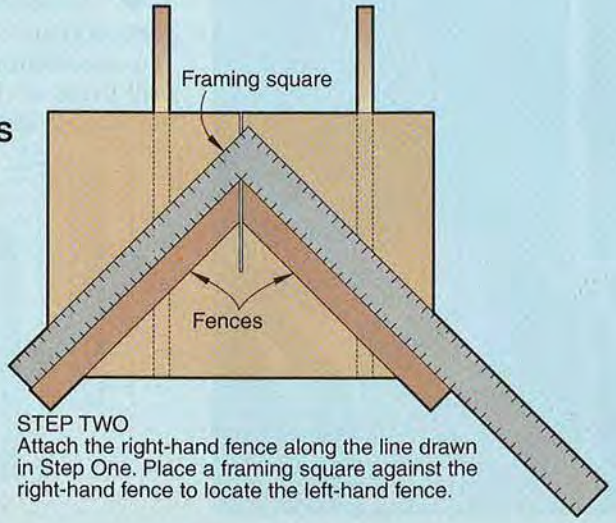

STEP TWO
Attach the right-hand fence along the line drawn in Step One. Place a framing square against the right-hand fence to locate the left-hand fence.

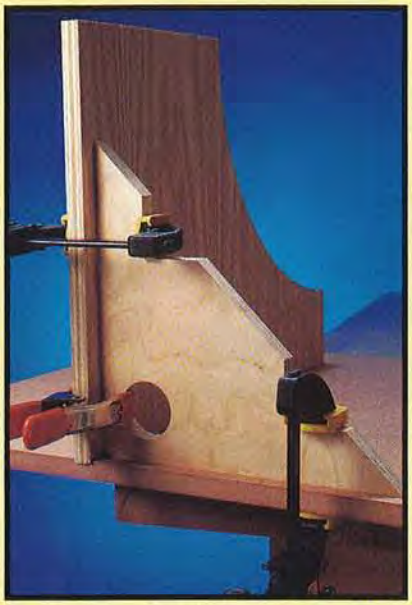

5 Right-angle jig gives you a corner on clamping tasks

Anytime you need to hold two large workpieces at a right angle, say while you're screwing or gluing them together, you need one or more of these plywood triangles. As shown in the photo *left*, these right-angle jigs have two notches for accepting clamp jaws. The circular cutout comes in handy for temporarily holding the jig in place with a spring clamp while you position bar clamps on the notches. It also gives you a way to hang the jig on a peg when you're through.

Like most of the jigs in this article, the more you use this helper the more jobs you'll find for it. Although we designed the jig for carcase assembly, we also found it handy for holding an on-edge picture frame rigidly to a bench as we sanded the frame's edges.

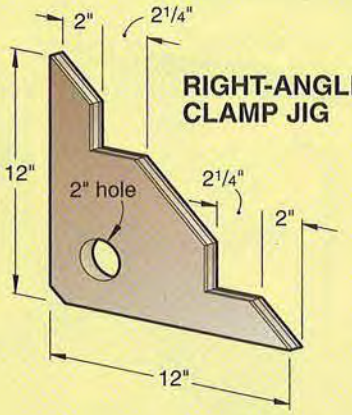

6 Evenly spaced holes were never so easy

With this jig clamped to your drill-press table, you can bore an unlimited number of evenly spaced holes. Here's how it works.

First, mark and drill two precisely spaced holes at one end of your workpiece. Place the jig on your drill-press table, and set one of the jig's dowels into the hole closest to the end of the workpiece. Align the fence so the drill bit slips into the other hole, and clamp the jig in place. Now, slide the workpiece along the fence until the dowel slips into the hole that you lined up with the bit. The workpiece should be precisely located for your next hole. Drill the hole, slide the workpiece so the dowel fits into the just-drilled hole, drill another hole, and repeat these steps as necessary.

The jig shown here has dowels for ¼"- and ⅜"-diameter holes. If you're drilling holes of other diameters, simply make more dowels and the slotted piece that holds them. After mounting the wooden balls on the dowels, you will have to sand them slightly so they slip into the holes in the jig and into the holes you're drilling.

Continued

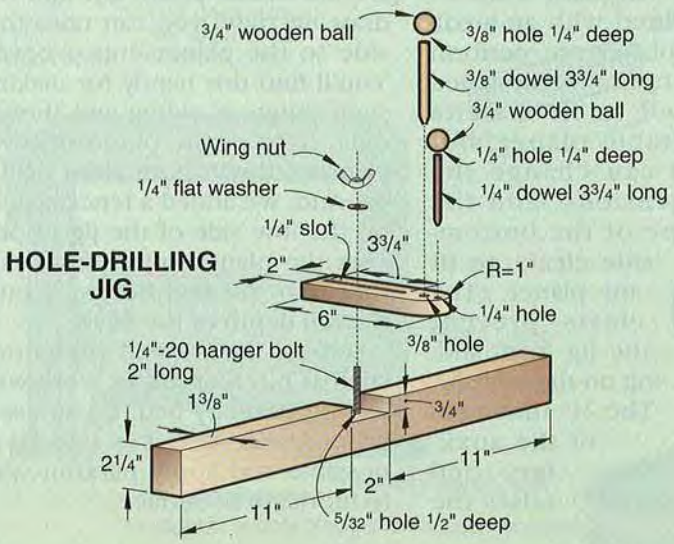

10 QUICK-AND-EASY SCRAPWOOD JIGS

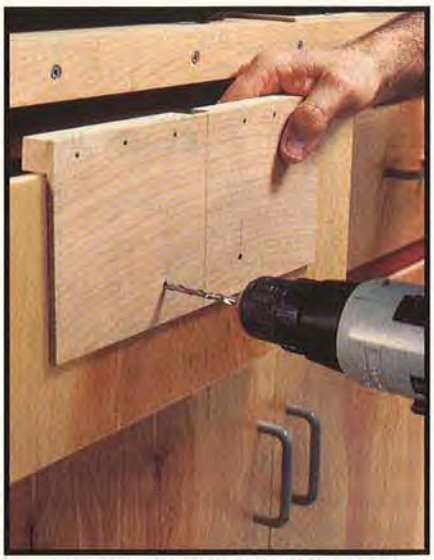

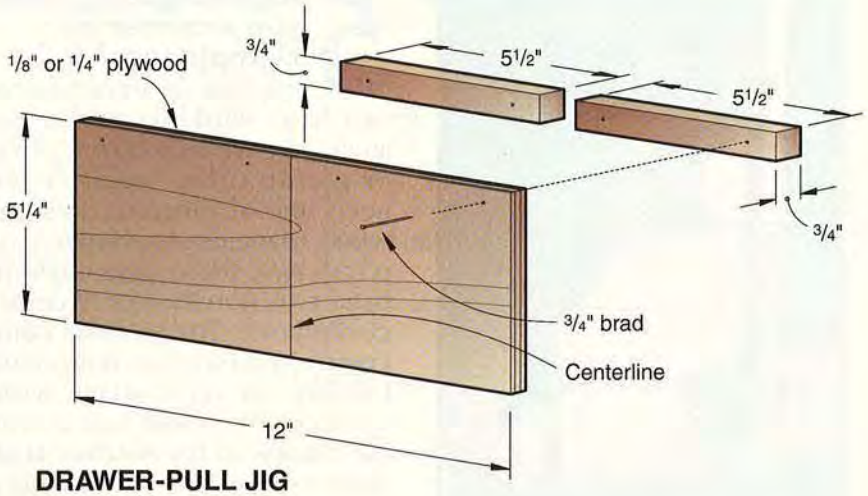

DRAWER-PULL JIG

7 Mount drawer pulls in a jiffy

You can build this jig in a minute or two, and with it you can slice many more minutes off the task of precisely drilling drawer-pull mounting holes.

To use it, first cut a ⅛" or ¼" scrap piece to 5¼"×12". Then, mark a vertical centerline on the jig. Mark and drill centered holes for the pulls on both sides of the vertical line. For most drawers you will want to locate the holes in the jig so the pulls are centered on the height of the drawer fronts. Then, mark the center of each drawer front on its top edge, align the jig's vertical centerline with it, and drill the holes as shown *above left*.

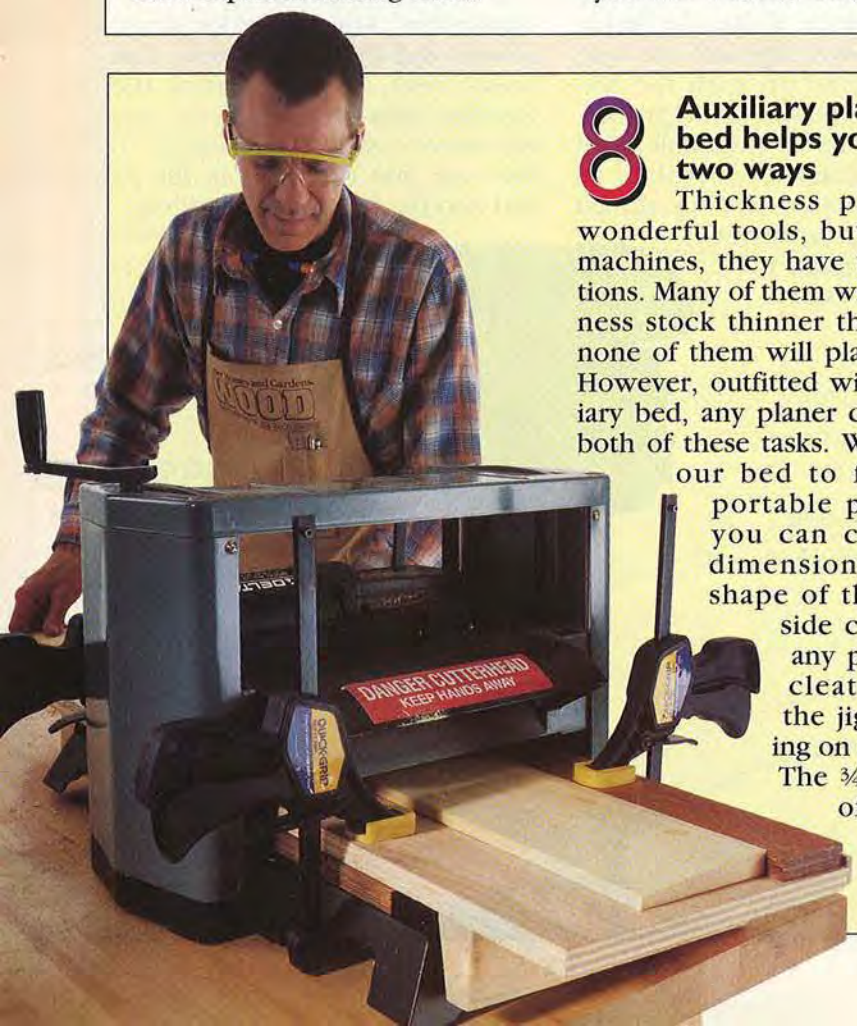

8 Auxiliary planer bed helps you in two ways

Thickness planers are wonderful tools, but like most machines, they have their limitations. Many of them will not thickness stock thinner than ¼", and none of them will plane a bevel. However, outfitted with an auxiliary bed, any planer can perform both of these tasks. We designed our bed to fit a Delta portable planer, but you can change the dimensions, and the shape of the bottom-side cleats, to fit any planer. (The cleats prevent the jig from sliding on the table.) The ¾" thickness of the auxiliary bed raises the height of the workpiece so that you can plane stock less than ¼" thick. There's no danger of damaging the knives because at the worst they will only cut slightly into the plywood surface.

By adding a spacer block under one side of the auxiliary bed, as we did in the photo *left* and the drawing *right*, you can raise that side so the planer cuts a bevel. You'll find this handy for making such things as siding and thresholds. Note in the photo that we clamped down both sides of the jig. And, we added a fence spacer on the low side of the jig to prevent the planer knives from cutting into the bed before it cuts the full depth of the bevel.

Smooth hardwood plywoods such as birch or maple work well for the auxiliary bed. If you use a lesser grade, sand it as smooth as possible and apply paraffin wax to lubricate its surface.

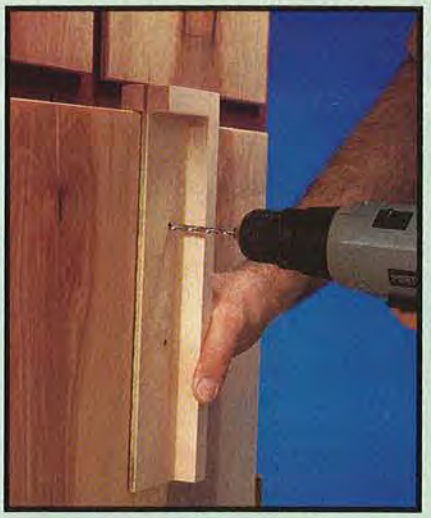

9 And now, an efficient way to install door handles

This jig works much like the drawer-pull jig *left*. But, as you can see in the drawing, it has solid-wood cleats on both sides so that you can locate handles on either the left or right side of adjoining doors. After drilling holes for one handle, just flip the jig over and drill from its other side for handles located on opposite door sides.

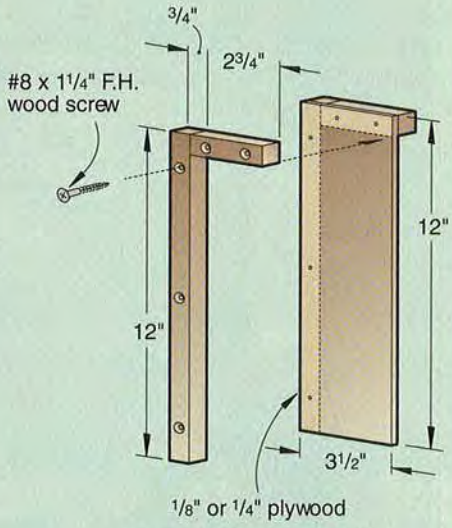

DOOR-HANDLE JIG

10 Hold-downs work where clamps or your hands won't

For drilling jobs, it's essential that you hold the workpiece securely to the table and against a fence before engaging the bit. With smaller workpieces you may not have clamps with the necessary jaw depth, and, as shown in the example *above*, you don't want to get your fingers close to knuckle-busting circle cutters. Hold-downs are the answer, and here's a version that will only set you back the cost of the knobs and all-thread rod. (Many woodworking catalogs carry such knobs.)

We drilled three holes into each side of our drill-press table for accommodating workpieces of various sizes. Each hole is outfitted with a T-nut for accepting the ¼" all-thread rod.

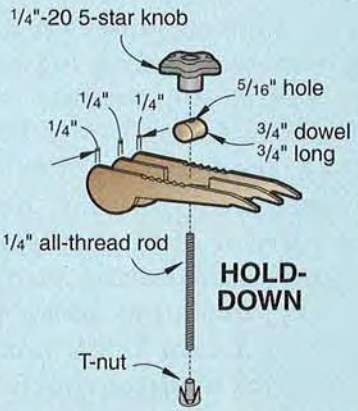

HOLD-DOWN

You'll find a full-sized pattern of the hold-down on the WOOD PATTERNS™ insert in the center of the magazine.

AUXILIARY BED

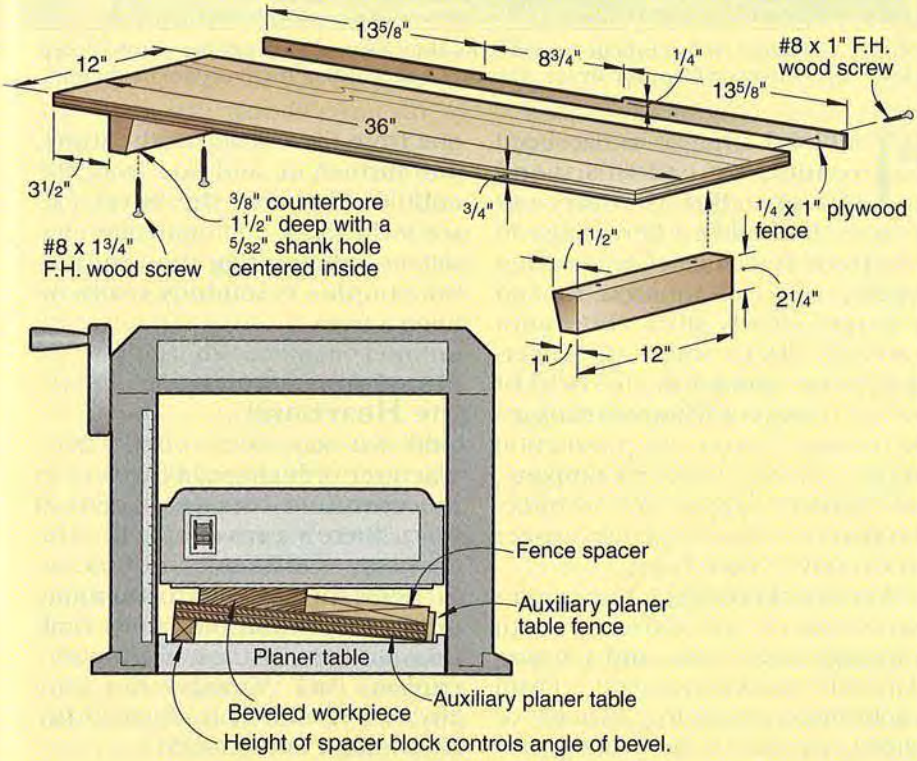

WHAT IT TAKES TO MAKE WOOD

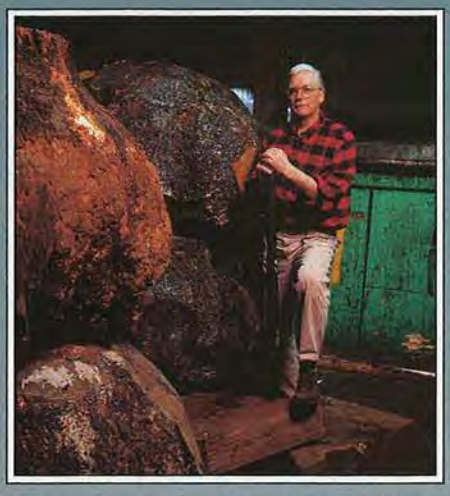

For ten years, my annual travel agenda has included a visit to a veneer mill. Somehow, I never got to one. You know, "the best laid plans . . ."

I pledged that it was going to be different this time around and seriously started looking up veneer mills in the national Hardwood Plywood Manufacturers Association (HPMA) directory. Believe me, they're all over the map. But hey, I found one close to home, in Iowa.

I visited the mill last February. What an experience that was. Seeing all that beautifully figured and rich-looking veneer coming off a log was really memorable. And I'll never forget their scrap pile—it made me want to take up marquetry. Anyway, here's hoping you enjoy my report as much as I did the visit. By the way, that's me *above* posing with a cant hook next to some giant madrone burls.

Peter J. Stephano

——Peter J. Stephano
Sr. Editor, Features

Sheets of walnut veneer, kept in order as they were sliced off the flitch, creep down the conveyor from the dryer. Pressing and banding further flattens them.

"In board form, or as flat-sliced veneer, we call this wood bubinga. But as rotary-cut veneer, it's dubbed kewazinga in the trade because of its striking figure," says Paul Johnson. He and a helper slowly fill a crate with carefully placed sheets of veneer. A forester trained in the field of wood products, Paul co-manages with Mike Larson the production at R. S. Bacon Veneer Company, an industry supplier of architectural and furniture-quality veneer in Grundy Center, Iowa.

"Veneer samples like these go to salesmen at our showrooms in Chicago, New York, and Calgary, Alberta," comments Paul. "From each flitch, or half-log, that we've sliced, we put in three samples—one from the outside of the trunk, one further in, and one from the middle. That way the buyer can see if the color and figure are consistent." But getting those beautiful samples resembles reassembling a tree.

Heartwood from the Heartland

Odd as it may seem to find a manufacturer of high-quality veneer in the cornfield setting of central Iowa, there's a reason for it. "The company was founded in Chicago in 1898, then moved to Dubuque until 1980, when the family built this facility on their farmland," explains Paul. "Strange? Not actually; we're still real close to the best walnut in the world."

VENEER

SLICING IT THIN DOESN'T WIN IN QUALITY VENEER PRODUCTION

Cooking logs and burls in large vats softens the wood, making it easier to slice for veneer. The huge, 1,000-pound burls in the foreground are madrone, trucked from Oregon.

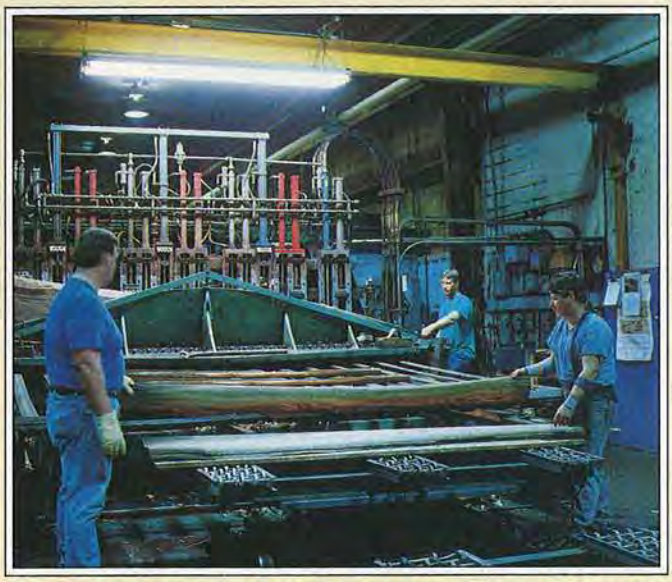

For flat-sliced veneer, the hot, wet half-log of walnut moves up and down against the stationary 13' knife. At R. S. Bacon, about 100 employees flat-slice and handle 130 logs in a week.

Black walnut from northeast Iowa by far represents the greatest amount of veneer produced by R. S. Bacon. All together, though, the company slices about 20 species of domestic hardwoods, and markets about 100 exotics. All the domestic woods come in by truck as logs or burls (especially Oregon madrone). The exotics arrive pre-sliced to their high specifications. "Slicing in the country of origin adds more value to the exported wood," notes Paul. Between the domestics and the exotics, the company continually maintains a veneer inventory of 40 million square feet!

Who buys it? A subcontractor who builds walnut-burl dashboards for Mercedes automobiles. Another who does a similar job for Cadillac, but with zebrawood. Even an occasional order for extra-thick veneer—for guitar parts—goes out to major manufacturers like Gibson. The furniture manufacturers in North Carolina, such as Thomasville, take a big bit. So do commercial cabinetmakers, suppliers of hardwood plywood, and architectural firms and their builders.

Regarding architectural use, Paul has noticed that preferences in wood have been changing. "Executives in billion-dollar corporations no longer want the look of exotic wood in their offices because of the rain-forest thing. Instead, they demand highly figured domestics. But all of the exotic veneers that we sell come from sustainable sources, too."

How to take a log apart and put it together again

"An average-sized walnut log eight and a half feet long and about 25" in diameter yields from 2,000 to 2,500 square feet of veneer, depending on how thin we slice it," says the plant manager. At R. S. Bacon, they slice veneer to a minimum thickness of 1/50" and a maximum of 1/8".

Paul excuses himself for a minute to fetch something from the office. He returns displaying a long, very flimsy length of yellow birch veneer. It looks like adding machine tape.

"This veneer is from a Wisconsin mill owned by Japanese interests," he says. "It's about 1/100" thick. Why, you can see through it! Our customers wouldn't stand for veneer that thin."

The manufacture of veneer begins at the on-site sawmill, where delivered logs get scaled for volume and examined for defects. If a log will be sliced for veneer, as with almost all of the walnut, sawyers slab it on two sides, then saw it in half lengthwise. Logs marked for rotary slicing, such as quilted maple, the mill leaves intact.

After leaving the sawmill, logs move along in the process to the cooking vats (see photo *above left*). These stainless steel containers—large enough to accommodate several logs—filled with plain hot water become temporary

Continued

Some woods produce more figure when rotary cut, as is being done with this big-leaf maple log turning against the knife. The veneer will feature a desirable quilted figure. Because of the log's uneven shape, it first produces small, irregular sheets.

Paul Johnson and Lin Senger carefully lay numbered samples of figured cherry into a shipping crate. A salesman in a faraway city sells the flitches of veneer they represent for paneling or furniture-grade plywood.

home to the logs prior to slicing. "The cooking softens the wood, so the harder the species the longer or the hotter it cooks," explains Paul. "Walnut cooks a minimum of three days at 156°. Maple takes two days at 165°, and white oak cooks at 175° for two days. Pacific yew takes the longest—three weeks. But we have to be careful with the white woods, such as maple. Too long in the vats and they turn brown."

Todd Speicher and a partner load walnut veneer by flitches onto a pallet for shipping to a customer. A pallet may hold up to 20,000 square feet of sliced veneer. Filling one industrial order sometimes requires 40 of those pallets.

The sweet-sour aroma of cooking wood permeates the plant. It hangs especially heavy near the vats, where an employee with a pneumatic plane cleans the emerging whole and half logs of their bark. At the vertical slicer, a 13'-long knife remains stationary as the wood moves up and down against it, a sheet of veneer coming off with every pass.

As the wet sheets come down the conveyors, workers stack them in the order in which they came off the log, front to back. In the trade, the completed pile of veneer from each half-log will from then on be called a flitch. Each flitch receives an I.D. number, and each bundle in the flitch carries a corresponding number. This enables the employees to trace the veneer in the vast inventory that R.S. Bacon warehouses.

It takes care to dry veneer

After slicing, different wood species require specialized treatment. Walnut, for instance, has a lighter color and a yellowish tint while wet. But, if left to air-dry overnight before heading into the automatic dryer, its natural chocolate color mysteriously returns. Without the air-drying, the color would look artificial. On the other hand, a white wood such as maple must immediately proceed to the dryer or it will discolor.

At the dryer, conveyors pass the veneer sheets beneath steam radiators, which dry them to about 18% moisture content. "There's an LED [light emitting diode] system on the dryer that scans the veneer to measure its square footage," says Paul. "That number is recorded for every flitch."

From the dryer, the veneer moves through the press for flattening, and further drying down to 6% moisture content. Then it will be crated, tightly banded to ensure flatness, and inventoried.

Throughout the entire process—slicing, drying, and pressing—each sheet is kept in order in the flitch, even though workers separate the sheets for each sequence. That's a lot of handwork, and a lot of bookwork. Yet it's necessary to meet the high standards of their customers. And R. S. Bacon takes yet another step in the tracking process. "Not only do we keep the sheets in a flitch numbered as to how they came off the log," says Paul, "we consecutively slice all the logs of the same species that come in from a specific area. That way, there's always continuity of color in our veneer."

Written by Peter J. Stephano
Photographs: King Au/Studio Au

Choose from 22 pages of original projects you can make.

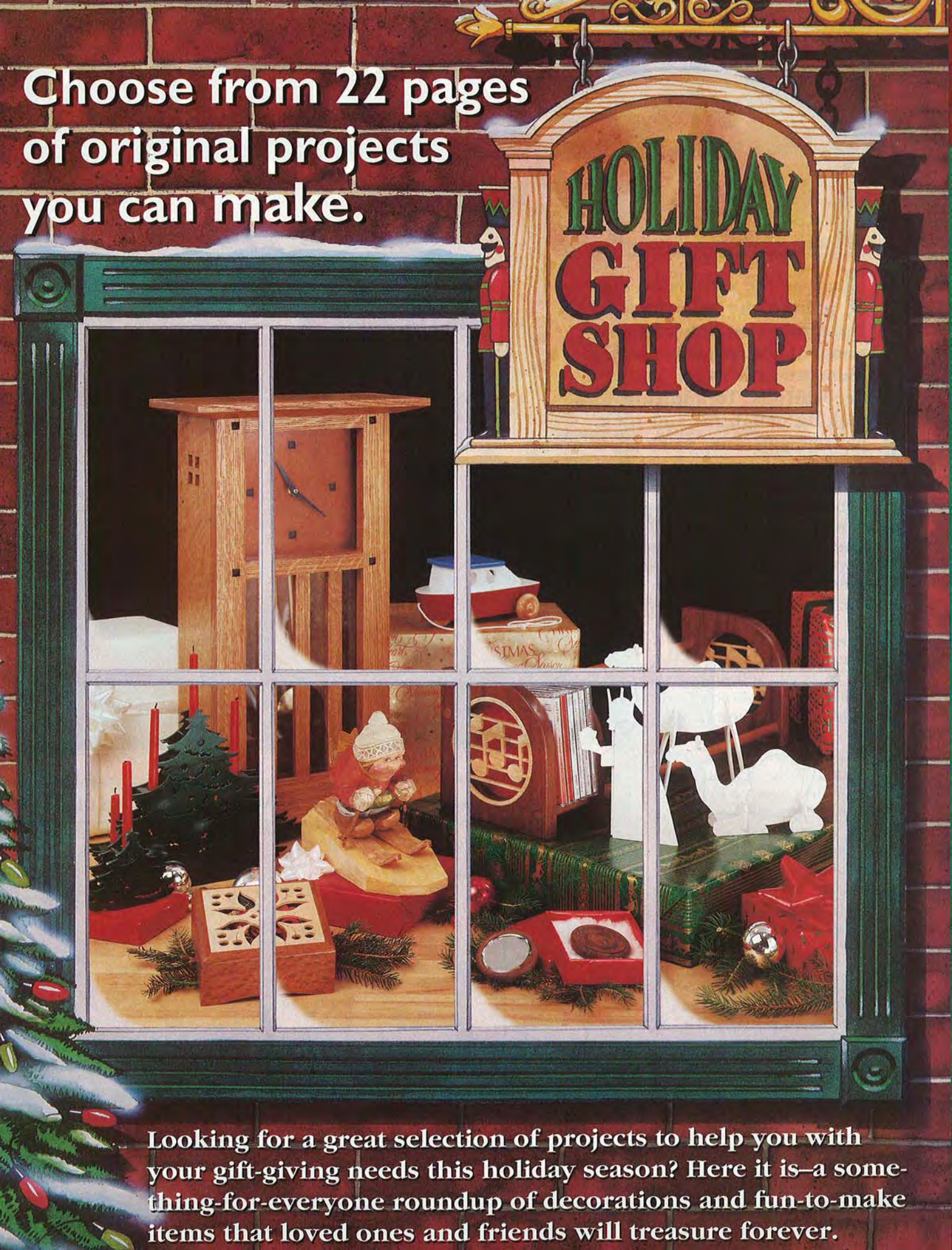

Looking for a great selection of projects to help you with your gift-giving needs this holiday season? Here it is–a something-for-everyone roundup of decorations and fun-to-make items that loved ones and friends will treasure forever.

HOLIDAY GIFT SHOP

PEACEFUL ADORATION
WISE MEN

Just as the camels accompanied the Wise Men to Bethlehem that holy night, so also will our stylized set complement your other holiday decorations. In addition to making delightful and inexpensive gifts, they work great as seasonal centerpieces.

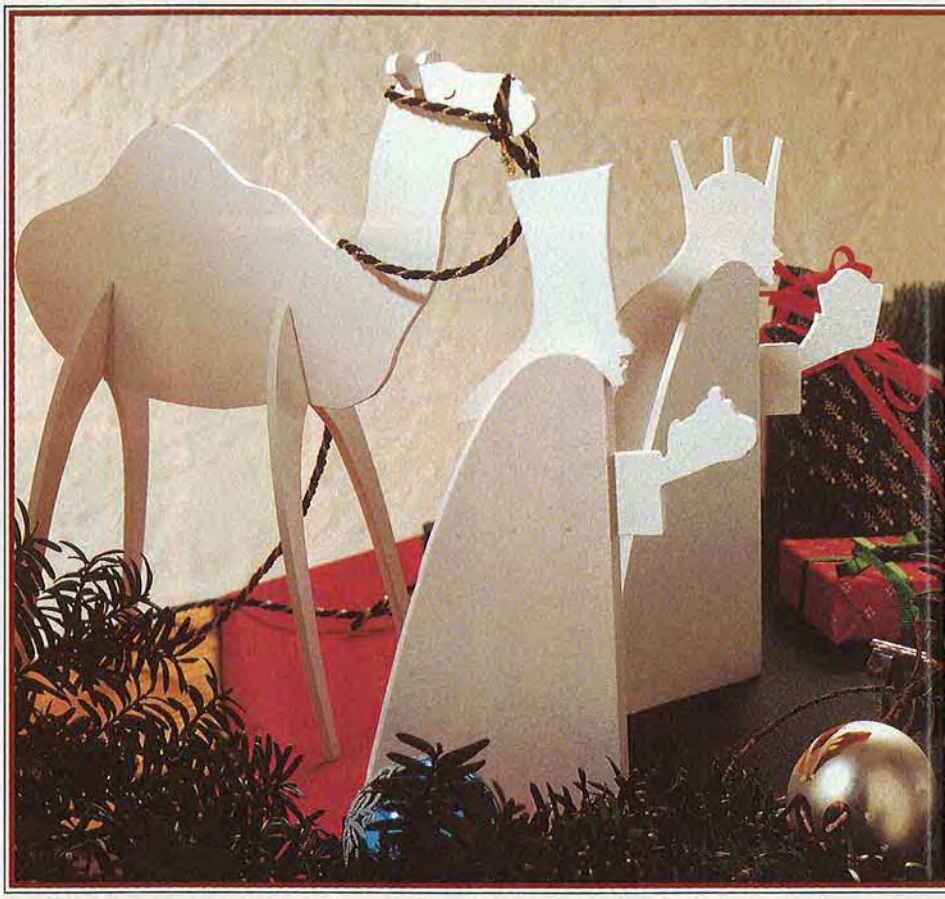

1 Using carbon paper or photocopies of the patterns and spray adhesive, transfer the full-sized patterns on the *WOOD PATTERNS*™ insert in the center of the magazine to posterboard or hardboard.

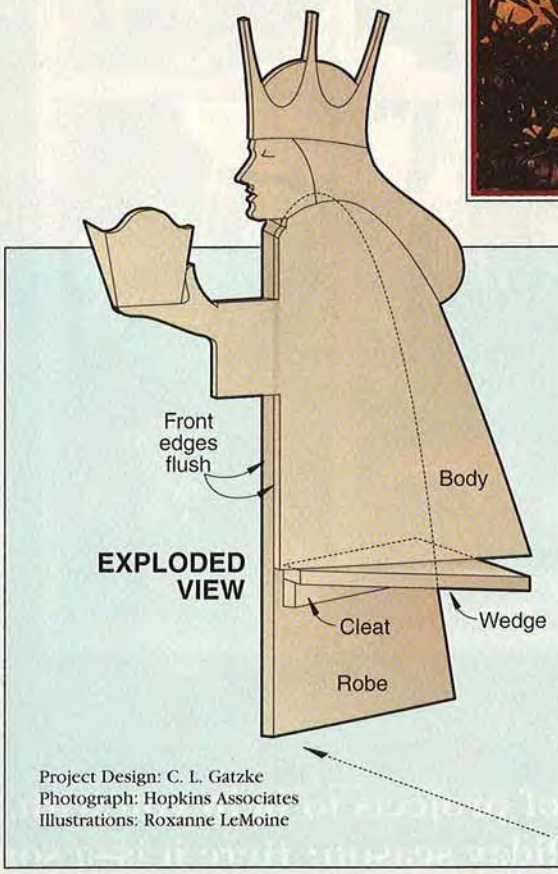

WISE MEN CUTTING DIAGRAM

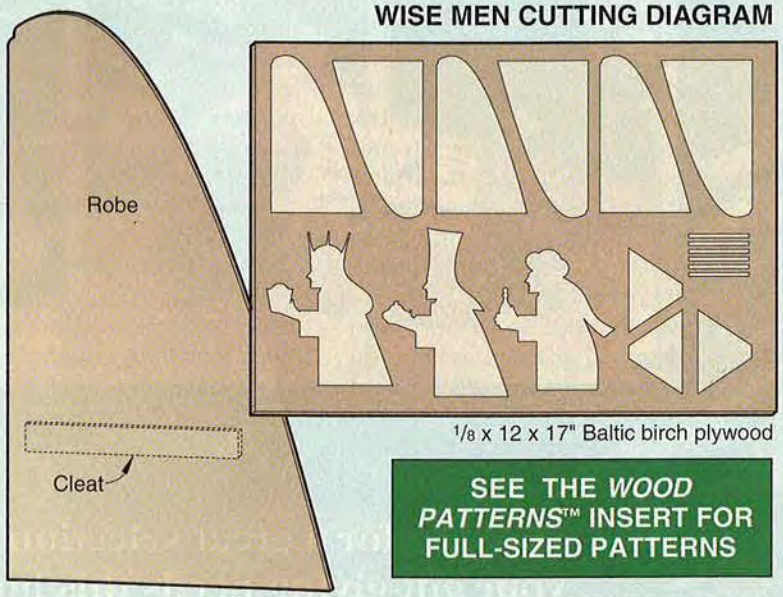

1/8 x 12 x 17" Baltic birch plywood

SEE THE *WOOD PATTERNS*™ INSERT FOR FULL-SIZED PATTERNS

Project Design: C. L. Gatzke
Photograph: Hopkins Associates
Illustrations: Roxanne LeMoine

Print this article

AND CAMELS

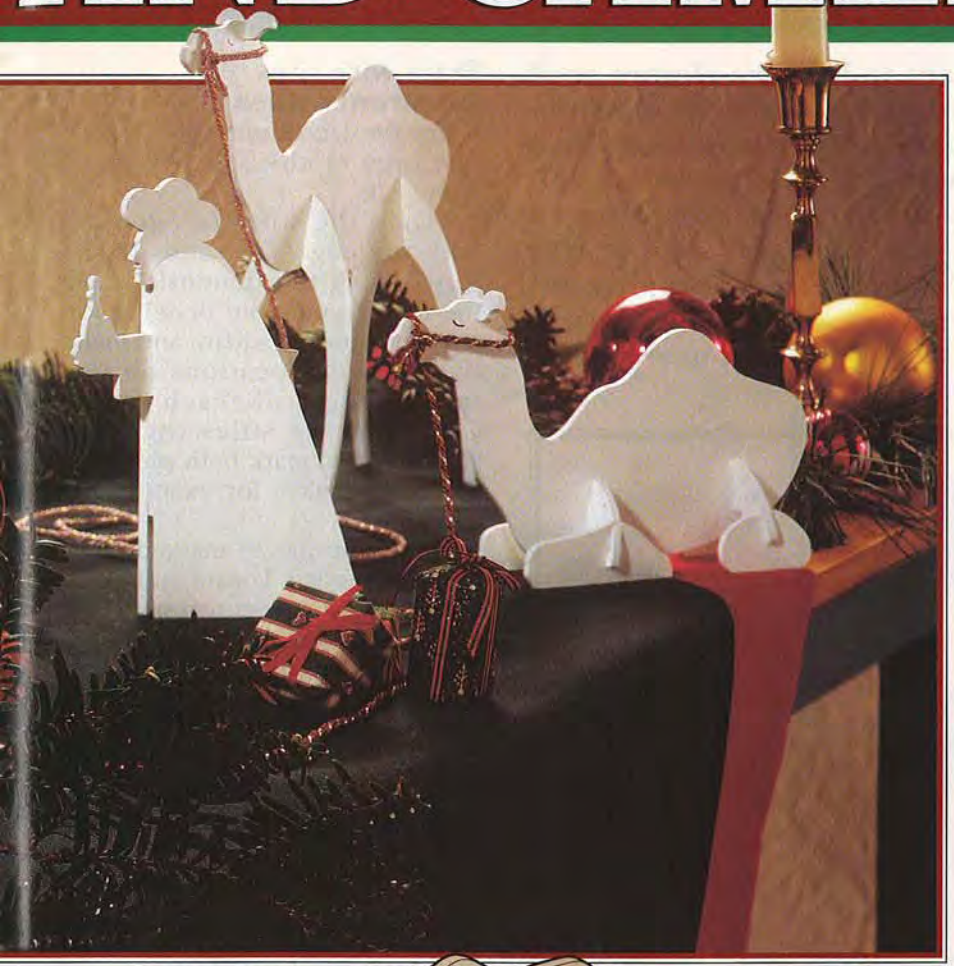

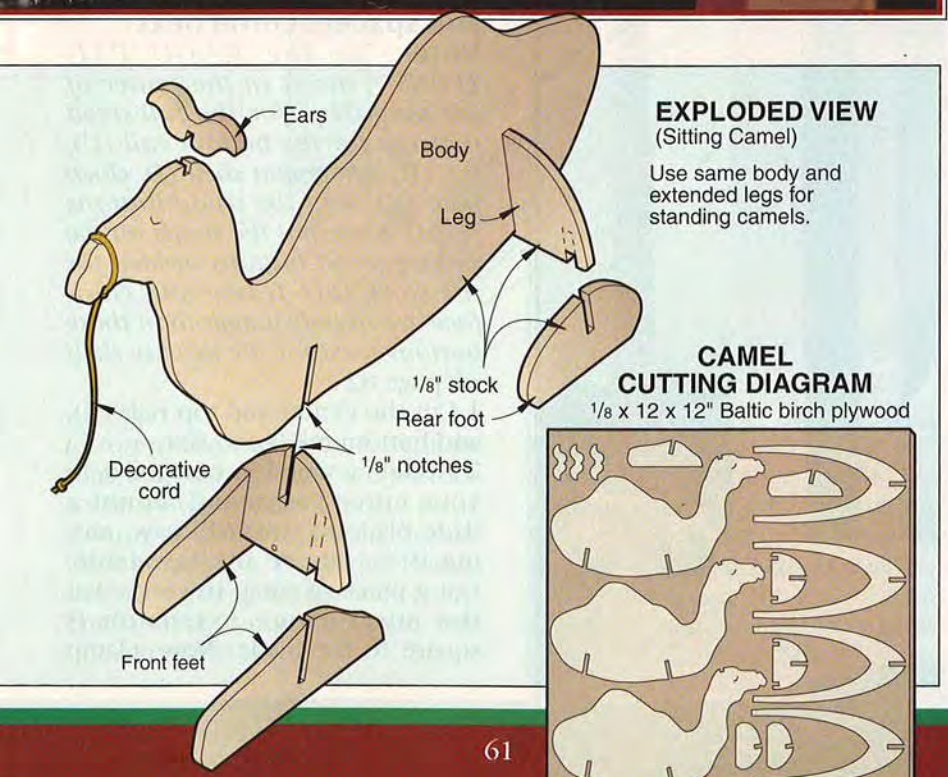

EXPLODED VIEW
(Sitting Camel)

Use same body and extended legs for standing camels.

CAMEL CUTTING DIAGRAM
1/8 x 12 x 12" Baltic birch plywood

Cut the patterns to shape to form templates. (Since we planned on making several sets, we made templates. If you're making just a set or two, transfer the patterns directly to the ⅛" stock.)

2 Use a sharp pencil to trace around the templates to transfer the patterns to ⅛" stock. (See the Buying Guide for our source of void-free birch plywood.)

3 Scrollsaw or bandsaw the pieces to shape (we used a #4 scrollsaw blade, .033×.014", with 15 teeth per inch; a bandsaw fitted with a ⅛" blade also works well). When cutting the notches in the parts, remember that the notch needs to be the same width as the thickness of the stock you're using. (Since we used ⅛" material for our camels and Wise Men, we show ⅛"-wide notches on our full-sized patterns. Adjust if necessary.)

4 Lightly sand the edges and surfaces with 220-grit sandpaper. Assemble the pieces as shown on the Exploded View drawing (we used a drop of instant glue at each joint to hold the pieces together). Spray on several coats of a quality gloss or semi-gloss white enamel paint. (To avoid runs, especially when in the holiday rush, we found it essential to apply several light coats rather than trying to paint the assembled pieces with a heavy coat or two. If the painted surfaces gets a bit rough, sand lightly with 320-grit paper before applying the last coat.)

Buying Guide
Void-free birch plywood. Two pieces of ⅛" plywood (enough for three camels and three Wise Men), $9.95 ppd., four pieces (enough for two sets), $14.95 ppd., or ten pieces (enough for five sets), for $26.95 ppd. Kit no. W841. Heritage Building Specialties, 205 North Cascade, Fergus Falls, MN 56537. Or call 800/524-4184 to order.

HOLIDAY GIFT SHOP

ARTS & CRAFTS STYLE MANTEL

It's hard to beat the elegant good looks of handcrafted mission-style pieces. We've continued that tradition with this handsome 21"-tall tabletop clock. Quartersawn oak, tapered square buttons, and an "aged" copper face make for a timepiece guaranteed to garner compliments (and orders for more). So you can achieve these same results, see the Buying Guide for a source of quartersawn oak, copper, and clock parts.

Start with the face-frame stiles

1 Cut the face-frame stiles (A) to size from ¾"-thick quartersawn white oak.

2 Clamp the stiles *face-to-face* with the edges and ends flush. Now, using the dimensions on the Face-Frame Stile drawing for reference, take a square and mark the mortise locations on the *inside edge* of each stile. Clamping the stiles together allows you to mark both pieces at once and makes for exact alignment later.

3 Clamp the pieces marked edge to marked edge. Locate and mark the button-hole centerpoints on the *front* face of each stile.

4 Form the mortises on the inside edge of each stile where previously marked. Although you could drill holes and use a chisel to square the holes to form the mortises, we prefer using a mortising attachment on our drill press or a mortising machine.

The face-frame rails, slats, and spacers come next

Note: *See the WOOD PATTERNS™ insert in the center of the magazine for the full-sized patterns for the bottom rail (C), top (I), movement shelf (J), clock face (K), and the wood buttons (F, M). Note that the shafts on the square wood buttons needed for the clock face frame and clock face are slightly longer than those buttons used for the display shelf* *on* page 82.

1 Cut the center and top rails (B), and bottom rail (C) to size.

2 Attach a wooden extension to your miter gauge and mount a dado blade to your tablesaw, raising it 3/16" above the saw table. Cut a piece of scrap to verify that the miter-gauge extension is square to the blade. Now, clamp

Print this article

CLOCK

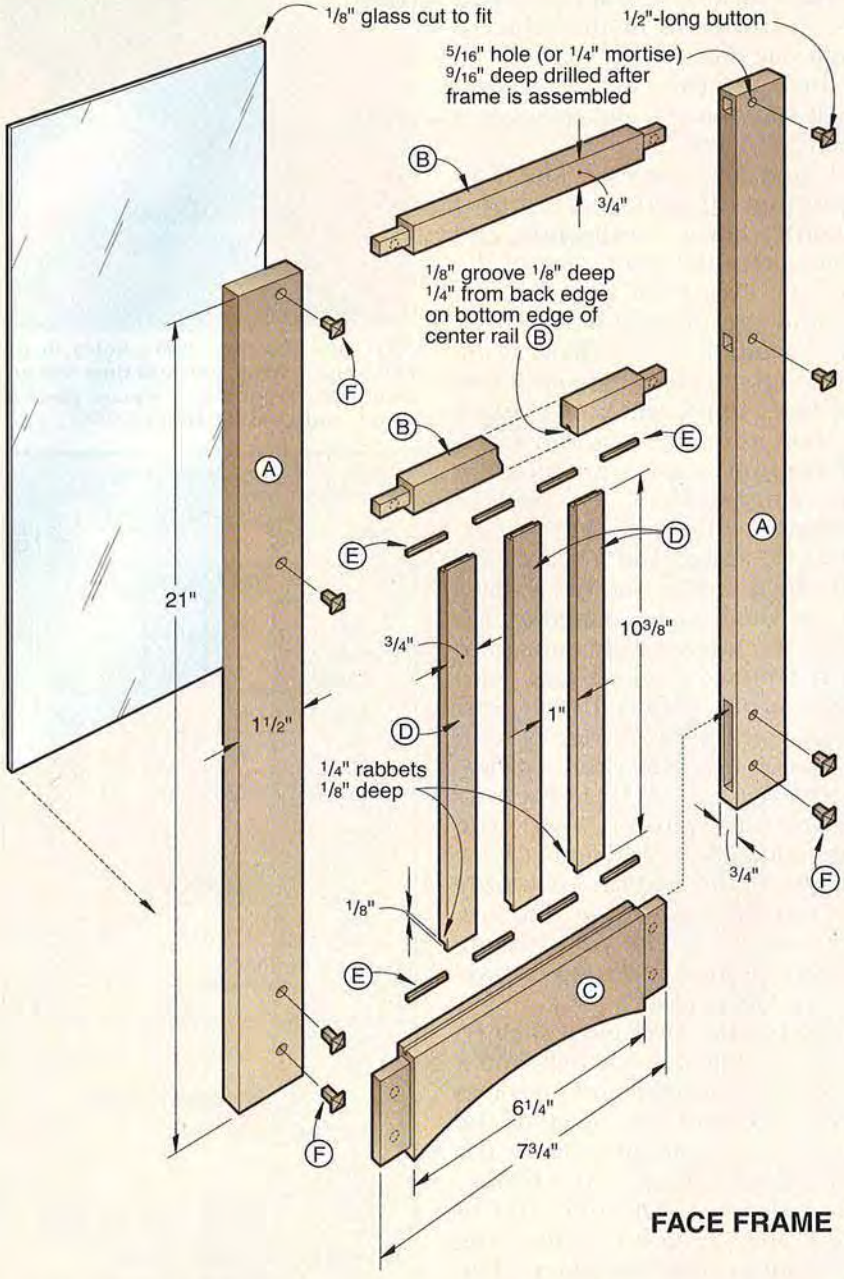

FACE FRAME

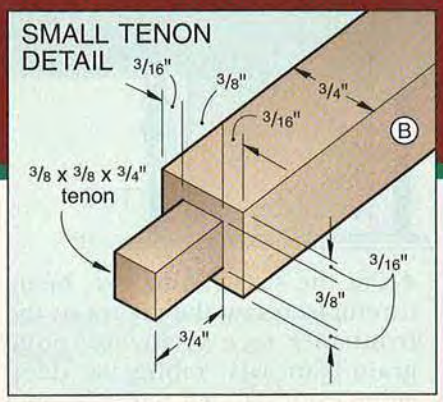

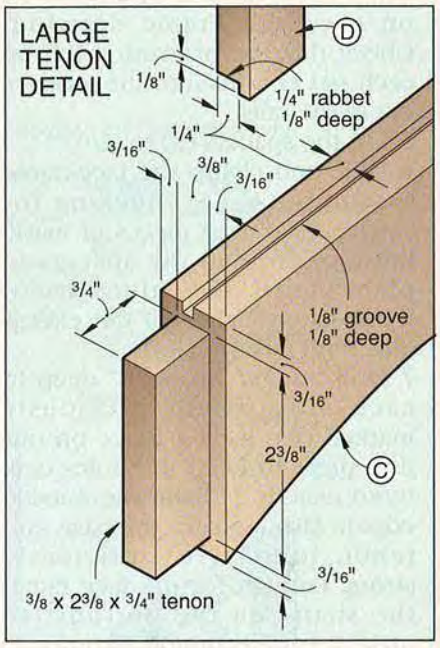

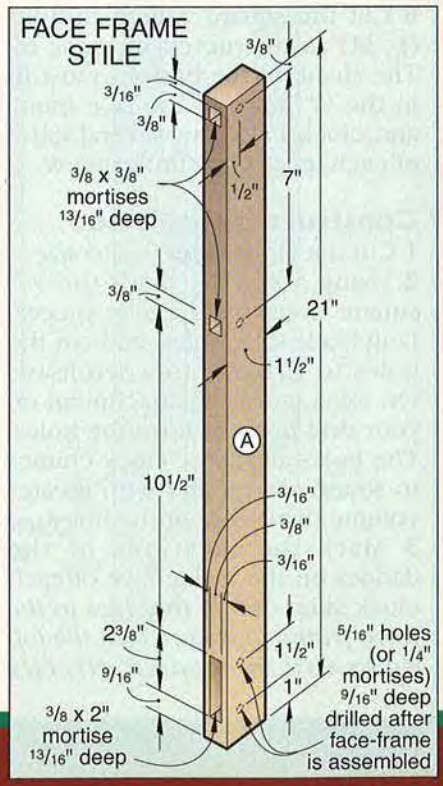

a stop to the extension for consistent lengths, and cut scrap stock to verify tenon size. See the Large Tenon and Small Tenon details accompanying the Face Frame drawing for dimensions. Now, cut ¾"-long tenons on each end of each rail (B, C).

3 Remove the dado blade and switch back to your ⅛" blade. Cut a ⅛" groove ⅛" deep along the *bottom* edge of the center rail (B) and along the top edge of the bottom rail (C). See the Face Frame drawing and accompanying Large Tenon detail for reference.

Continued

MANTEL CLOCK

HOLIDAY GIFT SHOP

4 Cut the slats (D) to size, being careful to resaw the pieces so the fronts are face grain, not edge grain. Cut a ¼" rabbet ⅛" deep along each slat end where shown on the Face Frame drawing. Check that the protrusion left on each slat end fits into the grooves cut in the rails.

5 Cut the spacers (E) to size.

6 Glue and clamp the face-frame assembly (A–E), checking for square. (We used pieces of masking tape to hold the spacers in place until the glue dried. Immediately, wipe off the excess glue with a damp cloth.

7 Drill the 5⁄16" holes 9⁄16" deep in each stile where previously marked (we used a fence on our drill press to keep the holes centered exactly 1" from the outside edge). Although the mortise and tenon joints are sufficiently strong enough for the face fame, the shafts on the buttons (F) make the joints doubly strong.

8 Cut the square walnut buttons (F, M) as instructed on *page 67* The shank of the buttons must fit in the ¼" holes in the face frame and clock face. Cut several extra of each length, we broke a few.

Construct the carcase

1 Cut the clock sides (G) to size.

2 Using a square, mark the ½"-square holes on the side pieces. Drill blade-start holes, and cut the holes to shape with a scrollsaw. Or, use a mortising attachment on your drill press to form the holes. The holes allow the clock chimes to sound clearer and with greater volume than without the holes.

3 Mark the locations of the dadoes on the inside face of each clock side. *Clamp the sides to the front frame to ensure that the top dado will be located directly behind the center rail (B), adjust if necessary.* Cut the dadoes. Now, cut a ⅜" rabbet ¼" deep along the back inside edge of each side piece.

4 Rip and crosscut the bottom shelf (H), top (I), and movement shelf (J) to size.

5 Using Chamfering The Top drawing for reference, cut a chamfer across both ends, and then across the front edge of the top (I). (We used a pushblock behind the piece when cutting the chamfers. Use a sharp blade and keep the piece moving across the blade to prevent burn marks.)

6 Mark the location and cut a pendulum access hole in the movement shelf (J) where dimensioned on the *WOOD PATTERNS™* insert. Cut a groove for the clock face in the top surface of the shelf where dimensioned. Make the groove wide enough to fit the plywood clock face with the copper adhered to it; our groove measured ¼" wide.

7 Clamp (no glue) the carcase assembly (G, H, I, J) in the configuration shown on the Exploded View drawing. *Check the fit of the carcase assembly against the face frame. The outside edges of the face frame should be flush with the outside face of the carcase.*

8 Remove the movement shelf (J) from the assembly and belt-sand it so it slides easily in and out of its mating dadoes. Now, keeping the ends flush, glue and clamp the side pieces to the face frame. Glue the bottom shelf (H) in place and position (no glue) the movement shelf in place. The shelves help hold the assembly square. Again, remove any excess glue with a damp cloth.

9 To clean-up the square holes, wrap self-adhesive 100-grit sandpaper around a ⅜×⅜×10" piece of hardwood stock, and sand the square holes as shown in the photo *above right.*

Continued

After forming the square holes in the clock sides, wrap 100- and then 150-grit sandpaper around a ⅜"-square piece of wood, and sand the holes.

Bill of Materials

Part	Finished Size T	W	L	Matl.	Qty.
FACE FRAME					
A stiles	¾"	1½"	21"	QO	2
B center & top rails	¾"	¾"	7¾"	QO	2
C bottom rail	¾"	2¾"	7¾"	QO	1
D slats	⅜"	¾"	10⅜"	QO	3
E spacers	⅛"	⅛"	1"	QO	8
F square buttons	⅜"	⅜"	⅝"	W	8
CARCASE					
G sides	¾"	4¼"	21"	QO	2
H bottom	¾"	4"	8¼"	QO	1
I top	¾"	6½"	12¼"	QO	1
J movement shelf	¾"	3 13⁄16"	8¼"	QO	1
FACE, BACK, AND BUTTONS					
K clock face	¼"	7⅝"	7¼"	OP	1
L back	¼"	8½"	19⅜"	OP	1
M square buttons	⅜"	⅜"	⅜"	W	4

Materials Key: QO–quartersawn oak, W–Walnut, OP–oak plywood

Supplies: ⅛" glass cut to fit, #8×¾" flathead wood screws, clear silicone, stain, clear finish.

Buying Guide

Movement and lumber kit. Chiming quartz pendulum movement with hands, #200495C, $26.80 ppd. Add $13.20 for a 7⅝×7¼" copper blank for the clock face, #COPDIAL. Add $44.50 for enough quartersawn oak and oak plywood (all pieces cut slightly oversized) for the clock. $79.95 ppd. for the movement, copper, and oak. All prices in U.S. dollars. Schlabaugh & Sons Woodworking, 720 14th Street, Kalona, IA 52247. Or call 800/346-9663 to order.

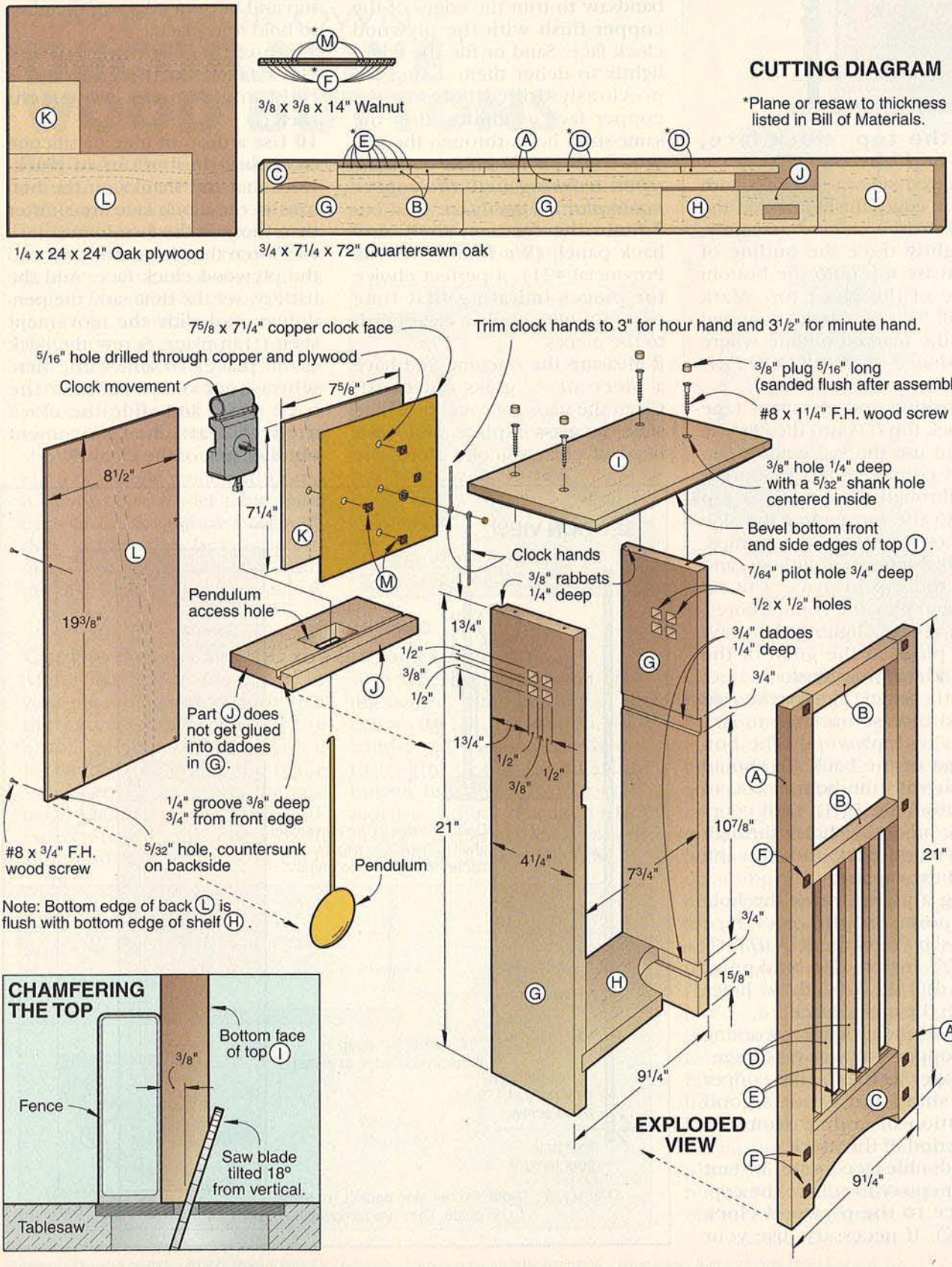
CUTTING DIAGRAM
*Plane or resaw to thickness listed in Bill of Materials.
3/8 x 3/8 x 14" Walnut
1/4 x 24 x 24" Oak plywood
3/4 x 7 1/4 x 72" Quartersawn oak
7 5/8 x 7 1/4" copper clock face
5/16" hole drilled through copper and plywood
Clock movement
Trim clock hands to 3" for hour hand and 3 1/2" for minute hand.
3/8" plug 5/16" long (sanded flush after assembly)
#8 x 1 1/4" F.H. wood screw
3/8" hole 1/4" deep with a 5/32" shank hole centered inside
Bevel bottom front and side edges of top (I).
Clock hands
7/64" pilot hole 3/4" deep
1/2 x 1/2" holes
3/4" dadoes 1/4" deep
3/8" rabbets 1/4" deep
Pendulum access hole
Part (J) does not get glued into dadoes in (G).
1/4" groove 3/8" deep 3/4" from front edge
#8 x 3/4" F.H. wood screw
5/32" hole, countersunk on backside
Pendulum
Note: Bottom edge of back (L) is flush with bottom edge of shelf (H).
8 1/2"
19 3/8"
7 5/8"
7 1/4"
1 3/4"
1/2"
3/8"
1/2"
1 3/4"
1/2"
1/2"
3/8"
21"
4 1/4"
7 3/4"
3/4"
10 7/8"
3/4"
1 5/8"
9 1/4"
21"
9 1/4"
EXPLODED VIEW
CHAMFERING THE TOP
Bottom face of top (I)
3/8"
Fence
Saw blade tilted 18° from vertical.
Tablesaw

MANTEL CLOCK

HOLIDAY GIFT SHOP

Add the top, clock face, back, and buttons

1 Centered side-to-side and with the back edges flush, position the top (I) on the carcase assembly, and lightly trace the outline of the carcase top onto the bottom surface of the clock top. Mark and drill 1/16" guide holes centered inside the marked outline where dimensioned on the *WOOD PATTERNS™* insert.

2 Reposition and clamp or tape the clock top (I) onto the carcase top, and use the 1/16" guide holes to drill counterbored mounting holes through the oak clock top and into the top end of the side pieces (G). Remove the clamps, sand off the marked outlines, and screw the top in place. Cut 3/8" plugs, and plug the counterbores, matching and aligning the grain of the plugs to the grain of the top. Sand the plugs flush.

3 Cut the clock face backboard (K) and carcase back (L) to size from 1/4" oak plywood. The bottom end of the back (L) should be flush with the bottom end of the bottom shelf (H). Drill countersunk mounting holes through the plywood back and into the back of the carcase.

4 Using a pencil, mark the hole centerpoints on the clock face where shown on the *WOOD PATTERNS™* insert. Use brad-point bits to drill the 1/4" and 5/16" holes through the copper face.

5 Refer to the article on working with copper on *page 8* to "age" the copper. Left as is, the copper is too shiny and is not a good replication of copper from the time period of this clock.

6 Use double-faced tape, instant glue, or epoxy to adhere the copper face to the plywood clock face (K). If necessary, use your bandsaw to trim the edges of the copper flush with the plywood clock face. Sand or file the edges lightly to debur them. Using the previously drilled holes in the copper face as guides, drill the same-sized holes through the plywood clock face. *Be careful when working with the copper not to mar the aged face.*

7 Stain the carcase, shelf, and back panel. (We found Minwax Provincial #211, a perfect choice for pieces imitating that time period.) Later, apply a clear finish to the pieces.

8 Measure the opening and have a piece of 1/8" glass cut to fit. Clean the glass thoroughly. Then, slide the glass in place, and run a bead of clear silicone along the top and bottom edges of the glass to hold it in place.

9 Glue the copper/plywood clock face into the groove at a right angle to the movement shelf (J).

10 Use a drop of glue or silicone to secure the buttons in place. Note that the shanks on the buttons in the clock face are shorter than those in the face frame.

11 Fasten the clock movement to the plywood clock face. Add the battery, set the time, add the pendulum, and slide the movement shelf (J) in place. Screw the back (L) in place. To adjust the time when necessary, remove the back panel and slide the clock shelf with attached movement out the back of the clock.

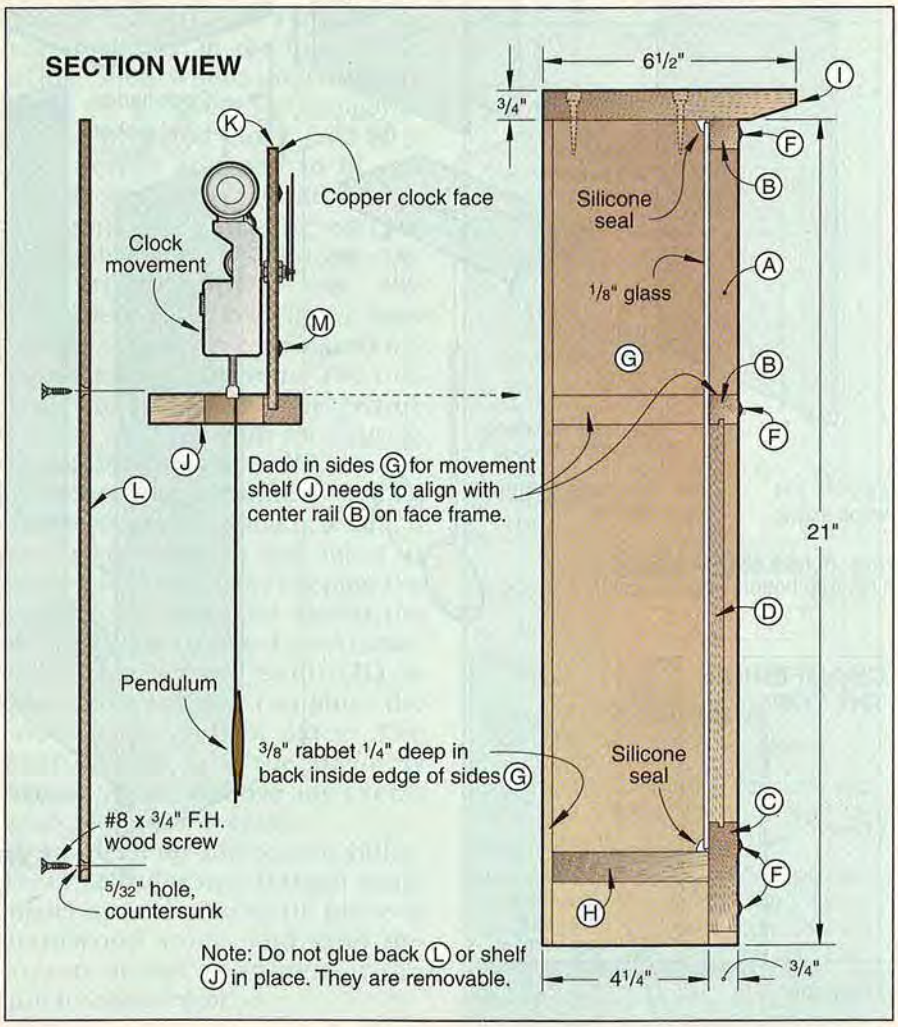
SECTION VIEW
6 1/2"
3/4"
21"
Copper clock face
Clock movement
Silicone seal
1/8" glass
Dado in sides G for movement shelf J needs to align with center rail B on face frame.
Pendulum
3/8" rabbet 1/4" deep in back inside edge of sides G
#8 x 3/4" F.H. wood screw
5/32" hole, countersunk
Note: Do not glue back L or shelf J in place. They are removable.
4 1/4"
3/4"

MAKE YOUR OWN DECORATIVE WOOD BUTTONS

Belt-sand the ends of square stock to start

For buttons that really stand out, choose a wood that contrasts with the project. For instance, on the preceding mantel clock project, we recommend dark walnut or EBON-X. EBON-X is a jet-black, treated-wood product that serves as an ebony substitute; call SuperTech Woods at 616/323-3570 to order. Start the process by ripping ⅜×⅜" strips to at least 4" long. Now, as shown in the drawing at *right*, cut a 67° angle guide and clamp it to your disc-sander table. Sand each of the four corners of both ends until the bevels meet directly in the center. The sanding disc tends to load up quickly so move the guide periodically and have a sanding-belt cleaning stick. Also, sand lightly to keep the wood from burning.

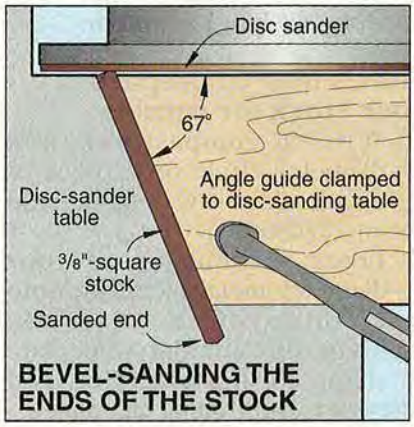

BEVEL-SANDING THE ENDS OF THE STOCK

Cut the dadoes and cut the buttons to length

Attach a wooden extension to your miter gauge, and verify that the extension is square to the blade. Fit your tablesaw with a ¼" dado blade. Raise the blade 5/64" above the surface of the saw table. Clamp a stop to the wooden extension, and cut a dado across all four surfaces of each strip where shown in the drawing *below*. After cutting all the dadoes for the first button, use a bandsaw to crosscut the button to length. Check the fit of the button into the 5/16" hole or ¼" mortise. Adjust the dado blade height if necessary for a snug fit of the plug shank in the hole.

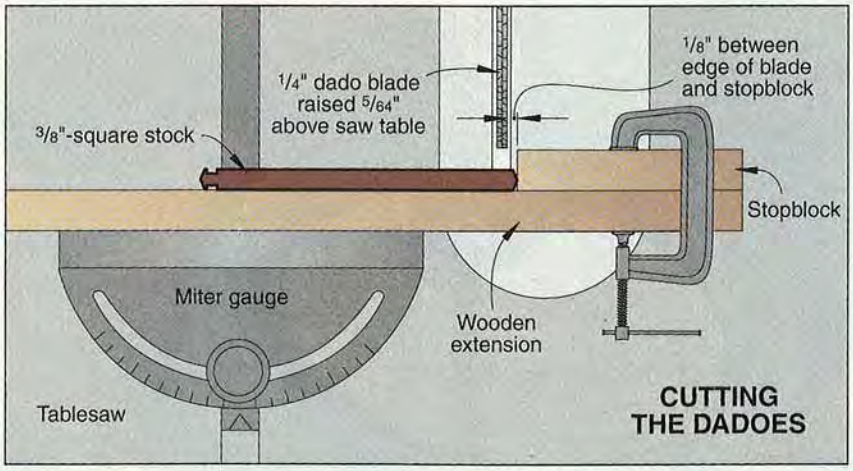

CUTTING THE DADOES

Create round or square holes for the buttons

For round mounting holes use Forstner, brad-point, or counterboring drill bit. For the more authentic square holes (mortises), fit your drill press with a mortising attachment or use a hollow-chisel mortiser. After dry-clamping the project together, drill a pilot hole through the center of the mortise and into the adjoining piece. Then, drive a trim-head screw to strengthen the joint. (Trim-head screws have smaller diameter heads than regular screws. We get ours from McFeely's: 800/443-7937). Finally, use a drop of glue to hold the plugs in place. For knock-down projects, use a dab of silicone to secure the plug in place. Silicone allows you to remove the plug without tearing out the wood around it.

Written by Marlen Kemmet Project Design: James R. Downing Photographs: John Hetherington Illustrations: Kim Downing; Lorna Johnson

"Who's the fairest?" PURSE

Woodturning doesn't get much simpler than this. In a single evening, you can create enough of these attractive cosmetic-mirror holders to satisfy all your friends and relatives. Best of all, it's a project that will barely dent your pocketbook or your scrap pile.

Print this article

***Note:** You'll need ½"-thick stock for this project. Plane or resaw a piece of stock ¾×3¼×12" to safely achieve this thickness. Also, for best looks, select highly figured stock. Be sure it's dry so that the turned project won't shrink later, possibly cracking the mirror.*

Here's how to prepare your stock for turning

1 With a compass, mark a 3"-diameter circle on a piece of ½" stock. Bandsaw just outside the marked circle.

2 Trace the outline of your 3"-diameter metal faceplate onto a 1"-thick piece of stock. Bandsaw this auxiliary faceplate to shape. Drill pilot holes, and screw it to your metal faceplate.

3 Center and adhere the mirror-holder blank to the auxiliary faceplate. Place the side that will be the back of the mirror holder against the faceplate. We used four drops of cyanoacrylate adhesive (instant glue); double-faced carpet tape would work, too.

It's time to turn

1 True up the outside edge and face of the blank. (We used a ⅜" shallow-fluted gouge.)

2 Turn a 2"-diameter flat-bottomed recess 3⁄16" deep to house the mirror. When making the final cuts on the recess, come in as straight as possible to ensure a 90° shoulder. See the Step 1 drawing for reference. Check the fit of the mirror into the recess; you need to allow about 1⁄32" edge clearance for possible wood shrinkage. Part the mirror holder from the auxiliary faceplate.

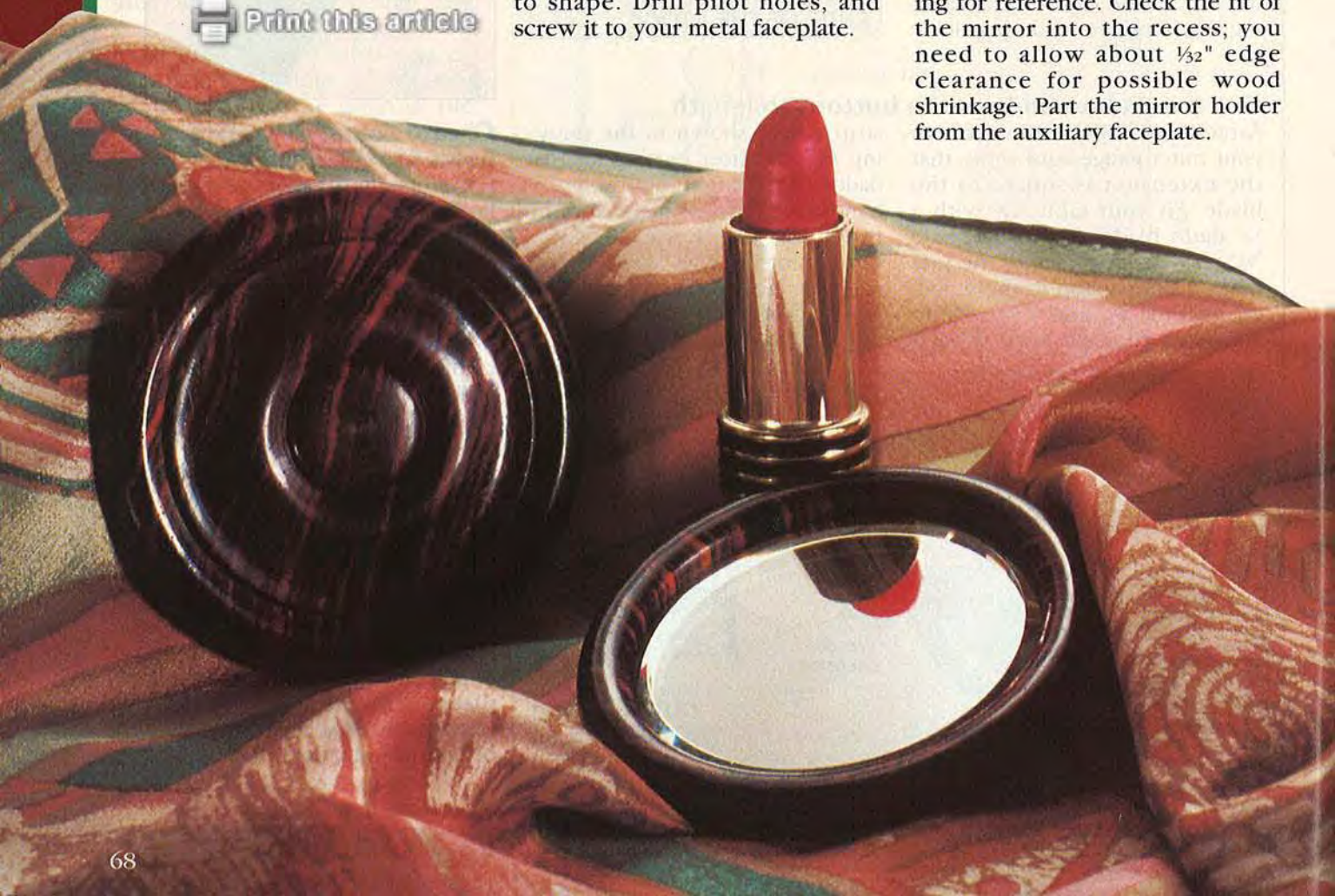

MIRROR *Make it for someone special*

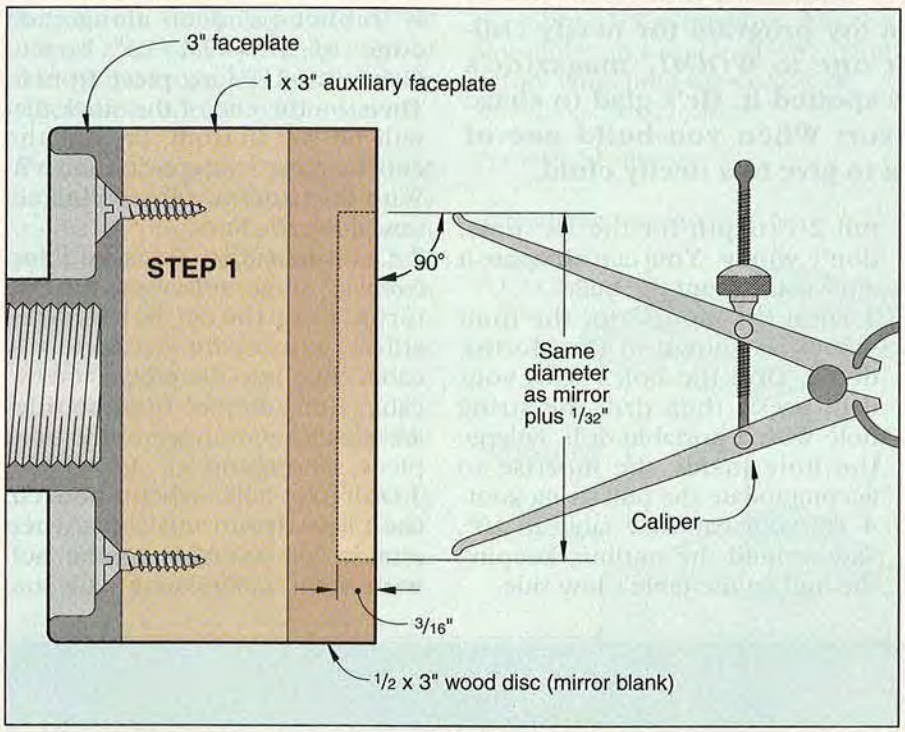

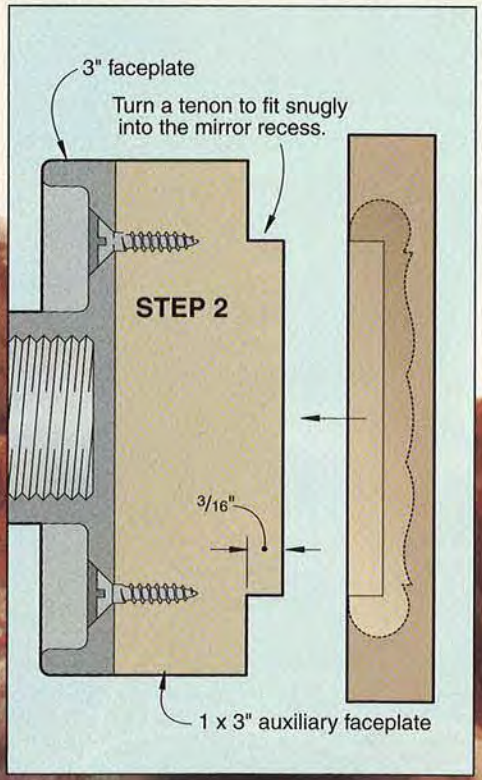

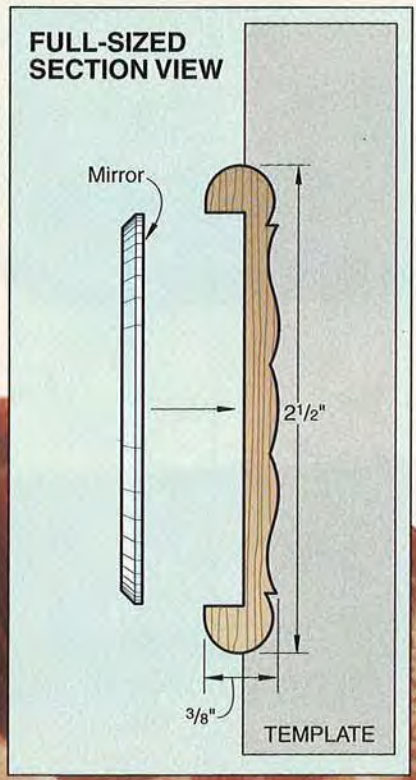

3 Form a tenon on the auxiliary faceplate, creating a jam-fit chuck where shown in the Step 2 drawing. (We used a parting tool.) The mirror holder must fit snugly onto the tenon. Start by making your tenon only 1/16" long, and determining the correct diameter. Then, turn the tenon to length.

4 Turn the back of the blank to the profile shown on the Full-Sized Section View *below left.* Or, create your own design.

5 Sand the mirror holder smooth, and apply the finish. (For the finish recipe used by Bonnie Klein, who designed and turned this project, see *below.*)

6 Separate the mirror holder from the auxiliary faceplace, and epoxy the mirror into the recess.

Bonnie Klein's finish recipe

For her fast-drying finish, Bonnie mixes equal parts of shellac, boiled linseed oil, and solvent alcohol (shellac thinner). With the workpiece on the running lathe, she applies the finish with a cloth pad. Heat generated by friction as the cloth rubs against the turning dries the finish quickly, creating a lustrous shine.

Buying Guide

Mirror blanks. Five 2"-diameter beveled mirrors, $13.75 ppd. in U.S. Add $8.75 for five suedecloth mirror bags (black, grey, or dusty rose). Packard Woodworks, P.O. Box 718, Tryon, NC 28782. Or call 800/683-8876 to order.

Project Design: Bonnie Klein
Photograph: Hopkins Associates
Illustrations: Kim Downing

A PLAYROOM SAILOR'S PULL TOY
LAND-LOVING

Reader Russell Lasho of Palm Harbor, Florida, and fellow members of the U.S. Power Squadron launched 360 of these little boats to help keep a toy program for needy children afloat. Russell also sent one to *WOOD*® magazine's Build-A-Toy® contest, where we spotted it. He's glad to share his design, but does ask a favor: When you build one of these little boats, make an extra to give to a needy child.

Cut out the hull

1 For the hull, joint the rounded corners from one edge of a 12" length of 2×4 stock (1½×3½" actual dimensions). Rip the piece to 3¼", then crosscut it to 8".

2 Trace the Full-Sized Hull Top-View pattern, in the *WOOD PATTERNS™* insert in the middle of the magazine, onto the stock. Drill the ⅜" hole on each side and the 1/16" hole on the left side, using a drill press. If you can't drill to the full 2¼" depth for the 1/16" hole, don't worry. You can deepen it after you cut out the hull.

3 Form the mortise for the front wheel, as shown in the Mortise detail. Drill the holes with your drill press, then drill the string hole with a portable drill. Enlarge the hole inside the mortise to accommodate the pull-string knot.

4 Tilt your bandsaw table to 10°. Saw around the outline, keeping the hull on the table's low side.

Construct the cabin next

1 To make the cabin front, rout a ¼" rabbet 3/16" deep along each edge of a ¾×2½×12" board. Crosscut a 1¼"-long piece from it. Then, on the end of the stock that will be the bottom, lay out the cabin front's shape as shown. With the bandsaw table still tilted, saw along the line.

2 Cut the cabin sides and top from ¼" stock, following the patterns. Bore the ¾" holes in the sides where shown. Glue the cabin sides into the rabbets on the cabin front. Ensure that the sides are parallel and square to the front piece, then clamp.

3 Drill pilot holes where shown in the cabin front and sides, then attach the assembly to the hull with brads or finishing nails and

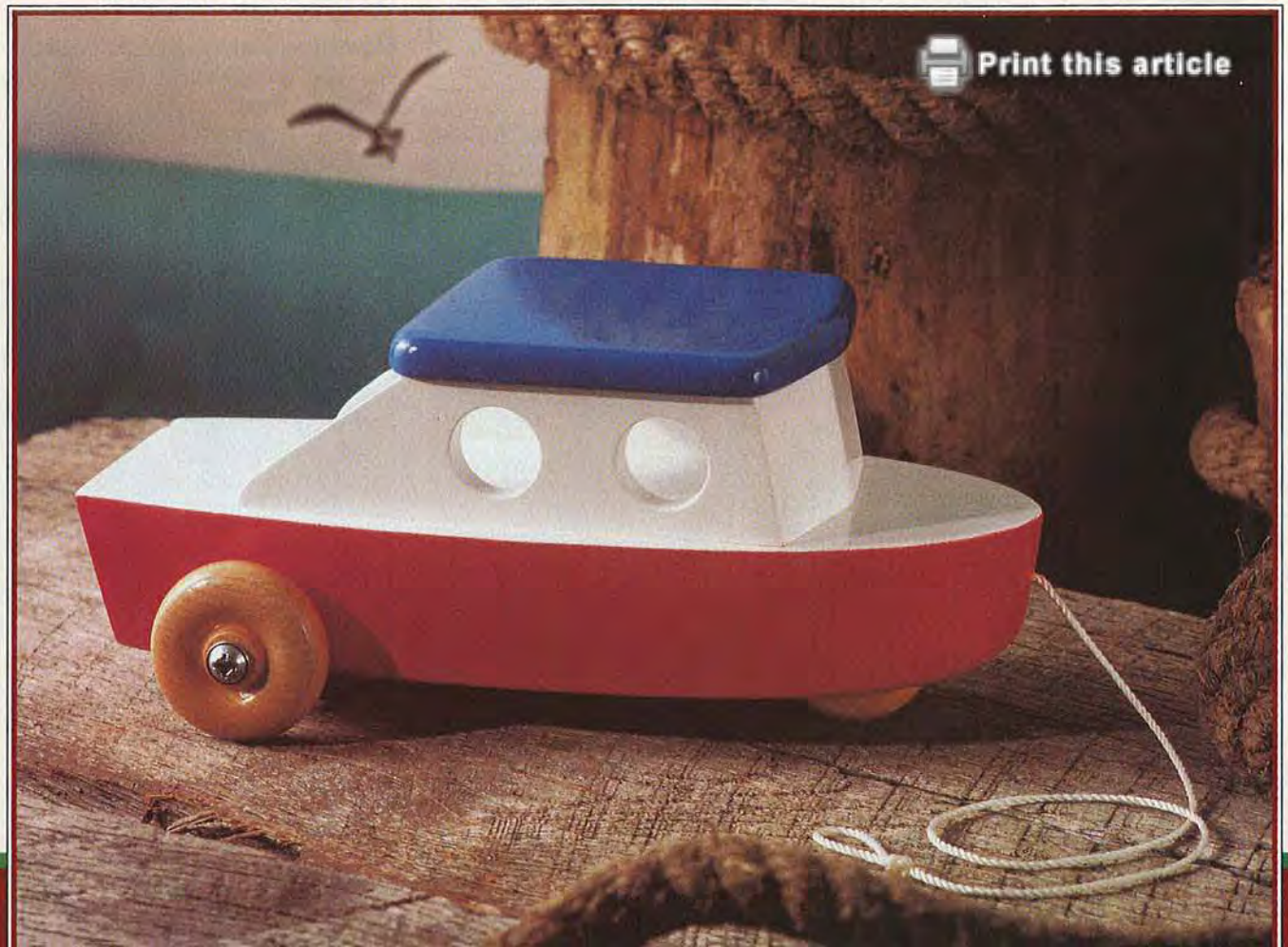

YACHT

glue. Drill pilot holes for the cabin top, then nail and glue it in place.

4 Cut two 7/8"-long pieces of 3/8" dowel rod. Glue one into each of the 3/8" holes in the hull. Drill a screw hole in each where shown.

Put on the paint and wheels

1 Finish-sand the boat, and apply a coat of primer. Paint your craft with gloss acrylic enamels in red, white, and blue (or your own color selections).

2 Install the two rear (or "aft," as we woodworking salts say) wheels with screws. Insert 1/4" plastic tubing into each wheel's center hole for a better fit.

3 Feed the end of an 18" string through the hole in the bow. Knot the end inside the mortise, and tie a loop in the other. Now, install the front wheel, using a headless nail for an axle and plastic tubing for a bushing. Fill the axle hole, and touch up the paint before launching the cruiser.

Project Design: ©Russell Lasho
Illustrations: Kim Downing
Photograph: John Hetherington

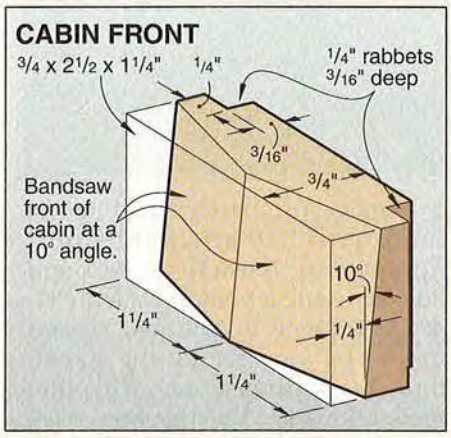

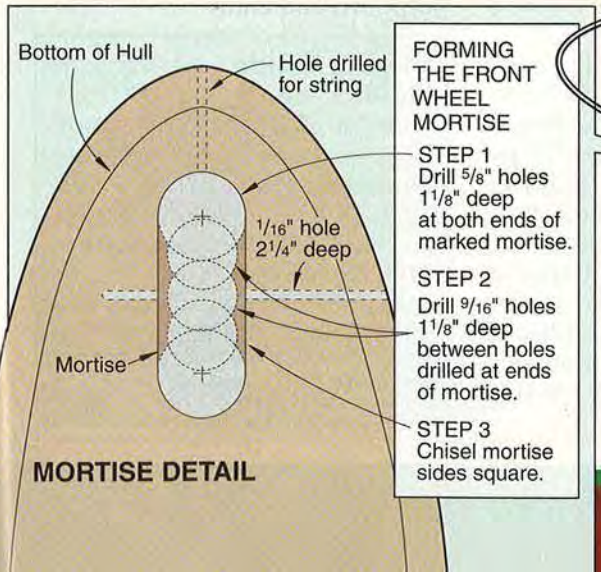
Bottom of Hull
Hole drilled for string
1/16" hole 2 1/4" deep
Mortise
MORTISE DETAIL
FORMING THE FRONT WHEEL MORTISE
STEP 1
Drill 5/8" holes 1 1/8" deep at both ends of marked mortise.
STEP 2
Drill 9/16" holes 1 1/8" deep between holes drilled at ends of mortise.
STEP 3
Chisel mortise sides square.

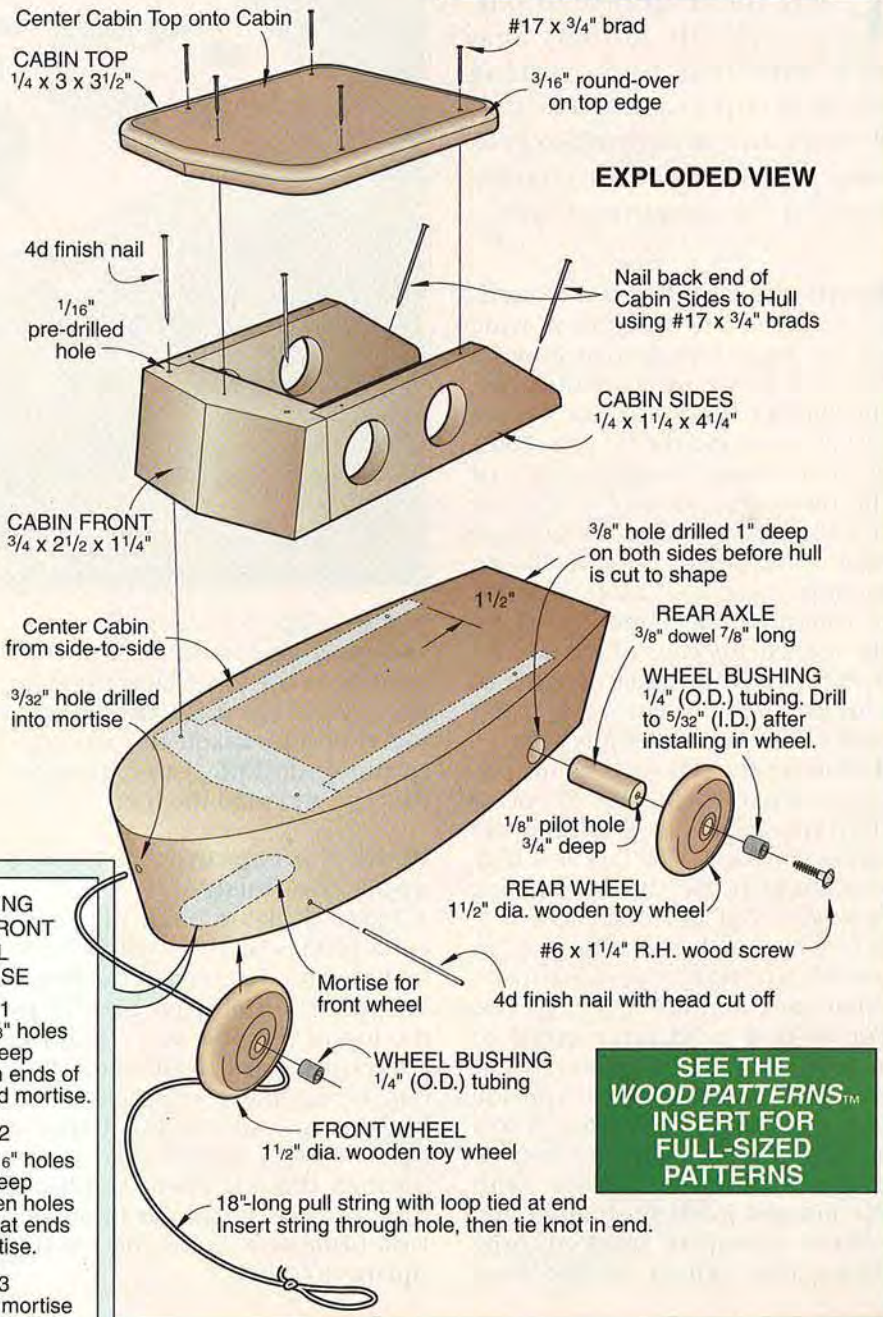
Center Cabin Top onto Cabin
CABIN TOP
1/4 x 3 x 3 1/2"
#17 x 3/4" brad
3/16" round-over on top edge
EXPLODED VIEW
4d finish nail
1/16" pre-drilled hole
Nail back end of Cabin Sides to Hull using #17 x 3/4" brads
CABIN SIDES
1/4 x 1 1/4 x 4 1/4"
CABIN FRONT
3/4 x 2 1/2 x 1 1/4"
3/8" hole drilled 1" deep on both sides before hull is cut to shape
1 1/2"
REAR AXLE
3/8" dowel 7/8" long
Center Cabin from side-to-side
3/32" hole drilled into mortise
WHEEL BUSHING
1/4" (O.D.) tubing. Drill to 5/32" (I.D.) after installing in wheel.
1/8" pilot hole 3/4" deep
REAR WHEEL
1 1/2" dia. wooden toy wheel
#6 x 1 1/4" R.H. wood screw
Mortise for front wheel
4d finish nail with head cut off
WHEEL BUSHING
1/4" (O.D.) tubing
FRONT WHEEL
1 1/2" dia. wooden toy wheel
18"-long pull string with loop tied at end
Insert string through hole, then tie knot in end.

SEE THE *WOOD PATTERNS*™ INSERT FOR FULL-SIZED PATTERNS

PUTTING-ON-AIRS POTPOURRI

Enjoy the fragrance of potpourri this holiday season with this one-evening shop project. A screened bottom and decorative scroll-sawed top maximize circulation for "scentsational" airs.

Form the box from a board

1 Cut a piece ½" stock to 2" wide by 24" long. (We planed down a ¾"-thick piece of lacewood. See the Buying Guide for our source of this stock and the ⅛" plywood.)
2 As shown in Steps 1 and 2 of the three-step drawing, cut a pair of rabbets along the *inside surface* of the stock. Now, as shown in Step 3, use a ½" round-over bit to rout a partial round-over along the *outside top edge* of the board.
3 Miter-cut four equal lengths of stock (ours measured 5" long each) from the 24"-long board.
4 Transfer the full-sized radius pattern to the bottom edge of one of the box sides. Cut and sand the radius to shape. Use this as a template to mark the three remaining box sides. Cut and sand them.
5 Dry-clamp the four pieces to check for tight corner joints. Then, glue and clamp the pieces. For an easy no-clamp method to adhere the mitered corners, start by placing all four pieces inside face down on a flat surface. Use a straightedge to align the bottom edges of all four box sides. With the mitered joints flush and tight, adhere a strip of masking tape down the center of the four pieces. Flip the assembly over, and apply glue to the mating ends as shown on the Clamping The Box drawing. Fold the pieces together and attach the tape tail to the open end. Later, remove the tape and sand the box.

Make the top and apply the finish

1 From ⅛" Baltic birch plywood, cut a piece 4¼×4¼" to fit into the rabbeted top opening in the box.
2 Apply the full-sized pattern to the top of the plywood. To act as a backing board to prevent chip-out, tape a piece of stock to the bottom side of the lid. Using a Forstner bit, drill the ⅜" holes through the lid. Then, scrollsaw the openings in the lid to shape. Drill blade start holes and cut the squares to shape.
3 Remove the pattern and lightly sand with 220-grit sandpaper. Apply a clear finish to the box and lid (we used Deft aerosol lacquer).
4 Cut a piece of window screen to 4¼×4¼" and secure the screen into the bottom rabbet with hot-melt adhesive. Fill the box with potpourri and enjoy.

Buying Guide

Lumber kit. Enough ½" lacewood and ⅛" birch plywood for one box, $9.95 ppd., or enough stock for five boxes, $28.95 ppd. Kit no. W843. Heritage Building Specialties, 205 North Cascade, Fergus Falls, MN 56537. Call 800/524-4184 to order.

Project Design: James R. Downing
Illustrations: Kim Downing
Photograph: Hopkins Associates

BOX

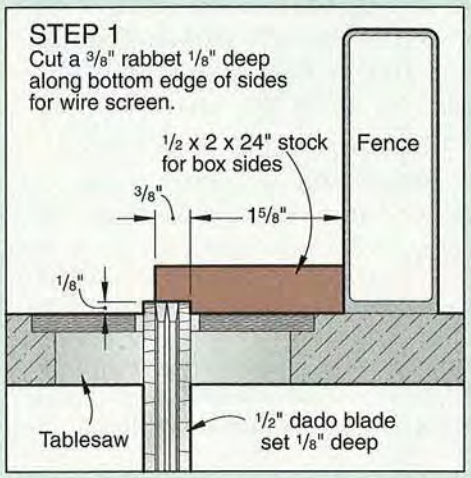
STEP 1
Cut a 3/8" rabbet 1/8" deep along bottom edge of sides for wire screen.
1/2 x 2 x 24" stock for box sides
Fence
3/8"
1 5/8"
1/8"
Tablesaw
1/2" dado blade set 1/8" deep

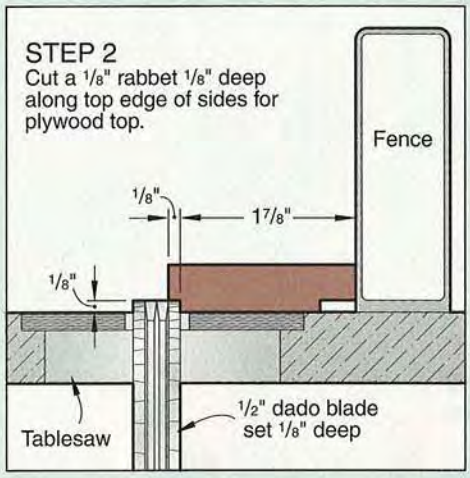

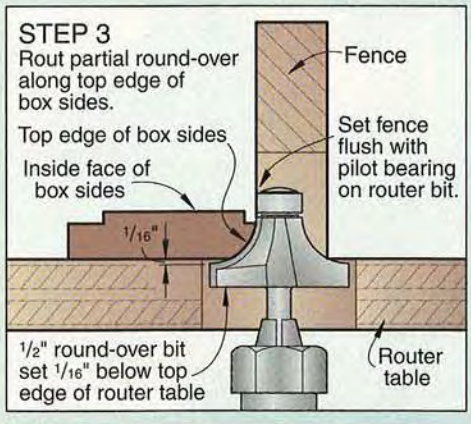
STEP 3
Rout partial round-over along top edge of box sides.
Fence
Top edge of box sides
Inside face of box sides
Set fence flush with pilot bearing on router bit.
1/16"
1/2" round-over bit set 1/16" below top edge of router table
Router table

SEE THE *WOOD PATTERNS*™ INSERT FOR FULL-SIZED PATTERNS

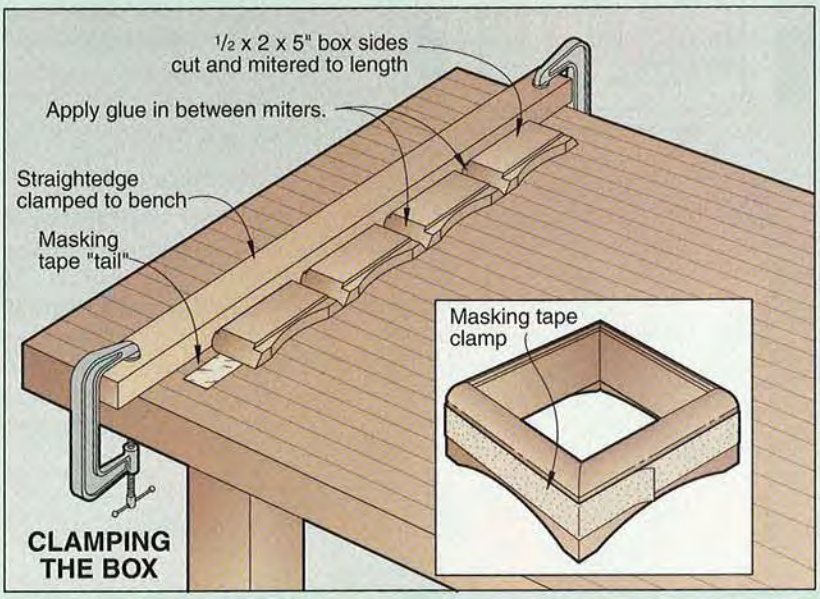
1/2 x 2 x 5" box sides cut and mitered to length
Apply glue in between miters.
Straightedge clamped to bench
Masking tape "tail"
Masking tape clamp
CLAMPING THE BOX

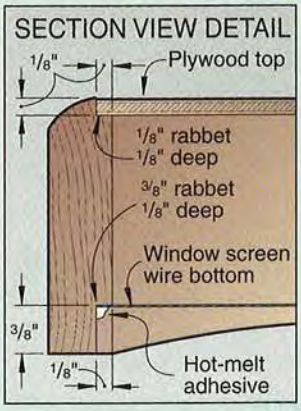

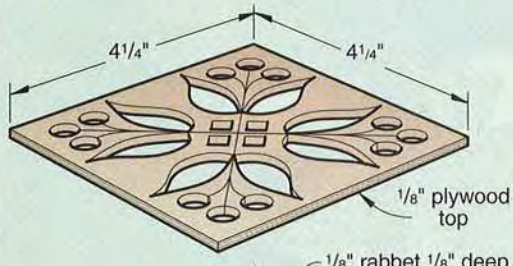

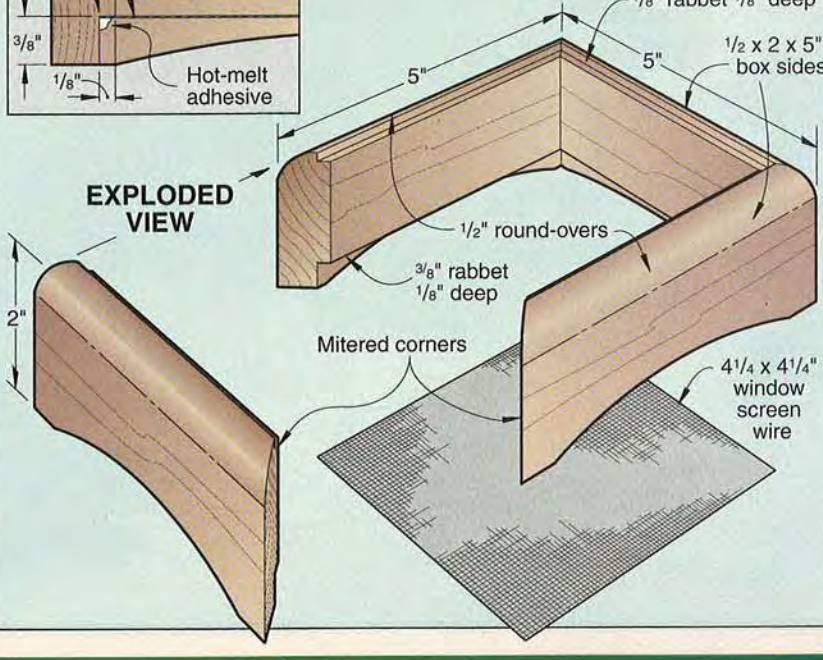

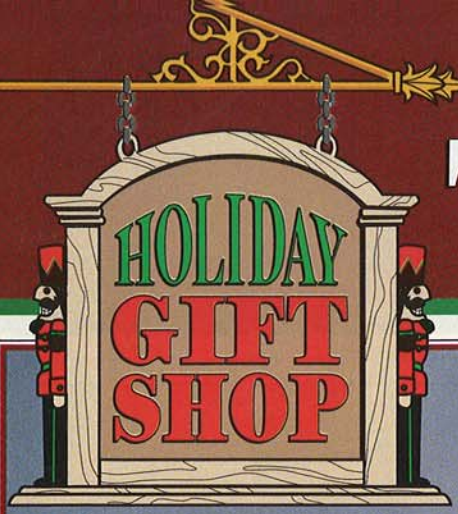

HAPPY HOLIDAYS TABLETOP

Scrollsawers and designers Kim and Rob Russell, winners of the Best Holiday Theme Award in our recent Great Scrollsaw Project Design Contest, collected $750 for their efforts with this festive rendition of the classic Christmas tree. On a mantel or as a table centerpiece, this delightful accent will do wonders for everyone's holiday spirit.

Note: *These holders are for decoration only. Because of the combustibility of wood, we do not recommend that you burn candles in them. Left unattended, the candles could burn to the wooden holders and start a fire.*

DECORATION

1 Using carbon paper or photocopies of the patterns and spray adhesive, transfer the full-sized tree patterns on the *WOOD PATTERNS™* insert in the center of the magazine to ⅛" stock. See the Buying Guide for our source of void-free birch plywood.

2 Scrollsaw the pieces to shape (we used a #4 scrollsaw blade, .033×.014", with 15 teeth per inch). Drill blade start holes, and scrollsaw the openings to shape.

3 Cut the candle-support blocks to size from solid stock. Hold each in a handscrew clamp, and drill a hole to fit the bottom end of your candles.

4 Lightly sand the edges and surfaces with 220-grit sandpaper. Assemble the trees as shown on the Exploded View drawing (we used a drop of instant glue at each spacer block to hold the pieces together). Brush or spray on a light coat of medium green paint. Then, wait about 30 seconds, and wipe off most of the paint to let the grain show through. We found this stained look more appealing than a coat of solid green paint.

Buying Guide

Void-free birch plywood. Two pieces of ⅛×10×12" plywood (enough for one large and one small tree and one piece of ¾×1×10" hardwood for the candle-support blocks), kit no. W842, $7.95 ppd. For enough stock for two sets (two large trees and two small trees), $10.95 ppd., or five sets of trees, $18.95 ppd. Heritage Building Specialties, 205 North Cascade, Fergus Falls, MN 56537. Or call 800/524-4184 to order.

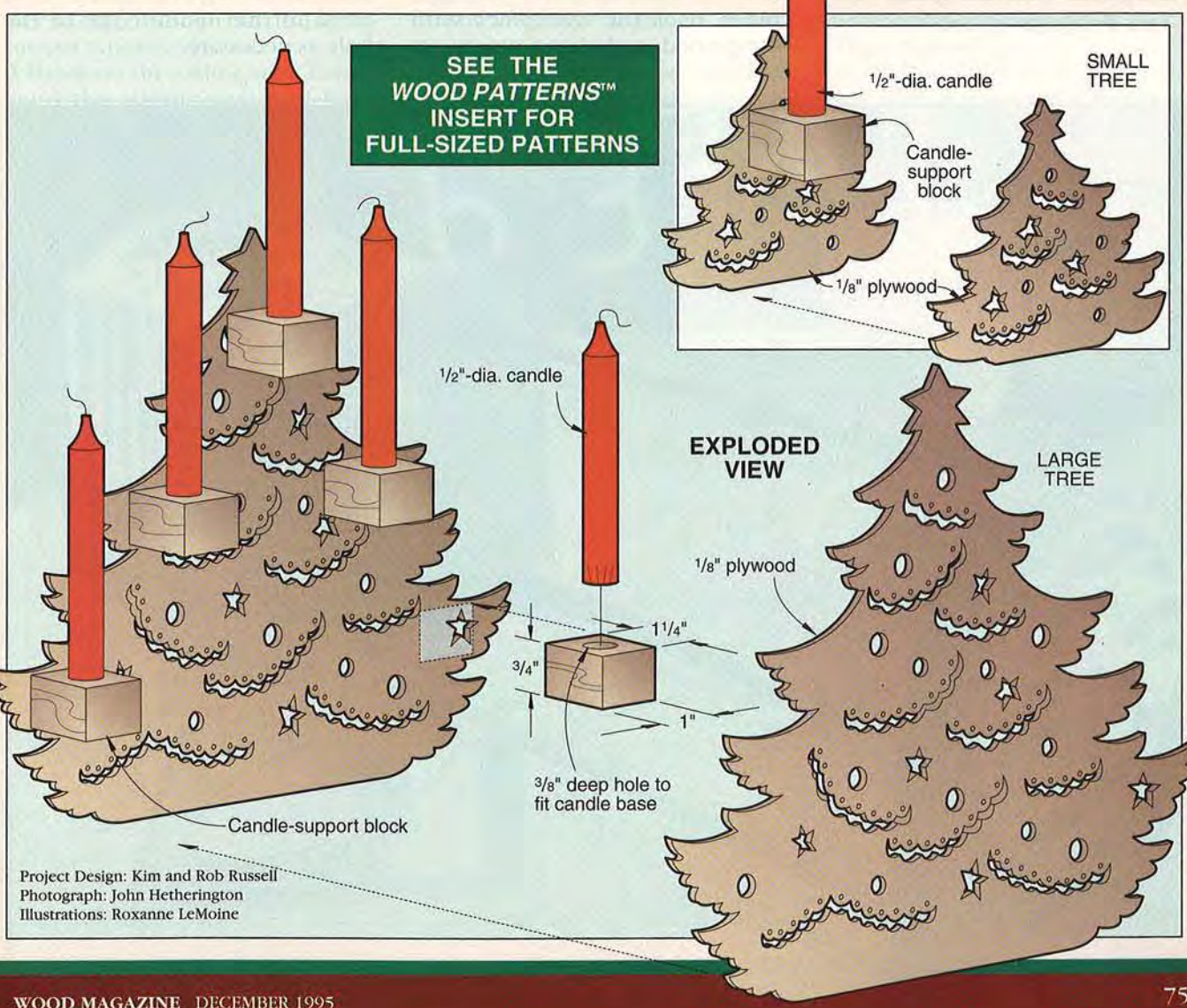

Project Design: Kim and Rob Russell
Photograph: John Hetherington
Illustrations: Roxanne LeMoine

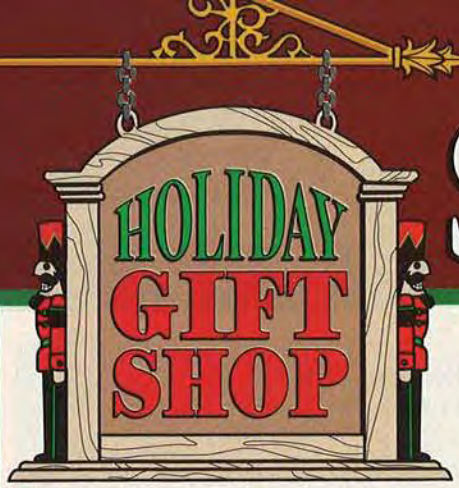

SCROLLSAW

Here's some sound advice from Santa: Make any music-lover on your gift list sing your praises by giving him or her this noteworthy CD rack. Easy to build, it's bound to rocket right to number one on your Top Ten Projects chart.

Note: *To build this CD rack you'll need three ¾×7×7" pieces of walnut, two ⅛×5×5" pieces of maple, and three 20" lengths of ½" walnut dowel rod.*

Start with the ends

1 Make two photocopies of the End pattern (A). (It's in the *WOOD PATTERNS™* insert in the middle of the magazine.) Using rubber cement or spray adhesive, adhere each to a ¾×7×7" piece of walnut.

2 Bore the 4⅜" hole through each end piece where shown. To do so, set your circle cutter's radius to 2 3/16", and chuck it in your drill press. Back the workpiece with scrapwood, and clamp it securely to the drill-press table. With the drill press running at 250 rpm, cut halfway through the stock. Then, for a clean job, flip the workpiece over. Insert the circle cutter's pilot bit into the pilot hole, and finish cutting.

3 Drill the three ½" holes through each piece where shown. To ensure that you drill the holes perpendicular to the surface, use the drill press. Again, place scrapwood under the part to minimize drill tear-out.

4 Bandsaw each end to shape, using a ⅛" blade. Stay slightly outside the cutting line, then sand to it. Sand the inside edge of the hole as necessary.

Print this article

MELODY Slick storage for your CDs

5 Install a piloted ¼" rabbeting bit in your router. Adjust the cutting depth to ⅛". Now, rout around the large hole where shown. Be sure to rout the left face of one and the right face of the other to make a matching pair of ends.

Next up: the sliding rest

1 Adhere the Sliding Rest pattern (B) to the remaining ¾×7×7" piece of walnut. Drill the three 9/16" holes where shown.

2 Drill a ⅛" blade start hole where shown. Feed a scrollsaw blade through the hole (we used a no. 7 blade, .045×.017" with 12 teeth per inch), and cut out the ornamental musical note.

3 Bandsaw the sliding rest. Finish-sand the sliding rest and both ends. Sand slight round-overs on all edges except the rabbets.

Make a little music

1 Stack the two ⅛×5×5" pieces of maple together, the grain on both pieces running the same direction. Bind them around the edges with masking tape.

2 Adhere the pattern for parts C to the top of the stack, aligning it with the grain. Drill the blade start holes where shown.

3 Insert the scrollsaw blade through a start hole near the center of the design. (For this finer cutting, we used a no. 4 blade, .035×.015" with 16 teeth per inch.) Cut out the small center areas first, then work your way out to the larger segments at the top and bottom.

4 Cut around the outside pattern line. Saw right along the line so the circles will fit into the rabbeted openings on the ends (A).

All together now

1 Glue one of the round cutouts into the rabbet on each end (A). Place the horizontal lines parallel to the end's bottom edge.

2 Glue a 20" length of ½" walnut dowel into each ½" hole in one end (A). Make the dowel ends flush with the end's outer face. Without gluing, slip the other end onto the dowels to ensure alignment.

3 After the glue dries, apply a clear finish to all parts. Mask off a little less than ¾" at the end of each dowel to leave unfinished wood for gluing. Also, don't put finish inside the ½" holes in the unattached end (A).

4 Allow the finish to dry. Then, slide part B onto the dowels. Glue the remaining end onto the dowel ends.

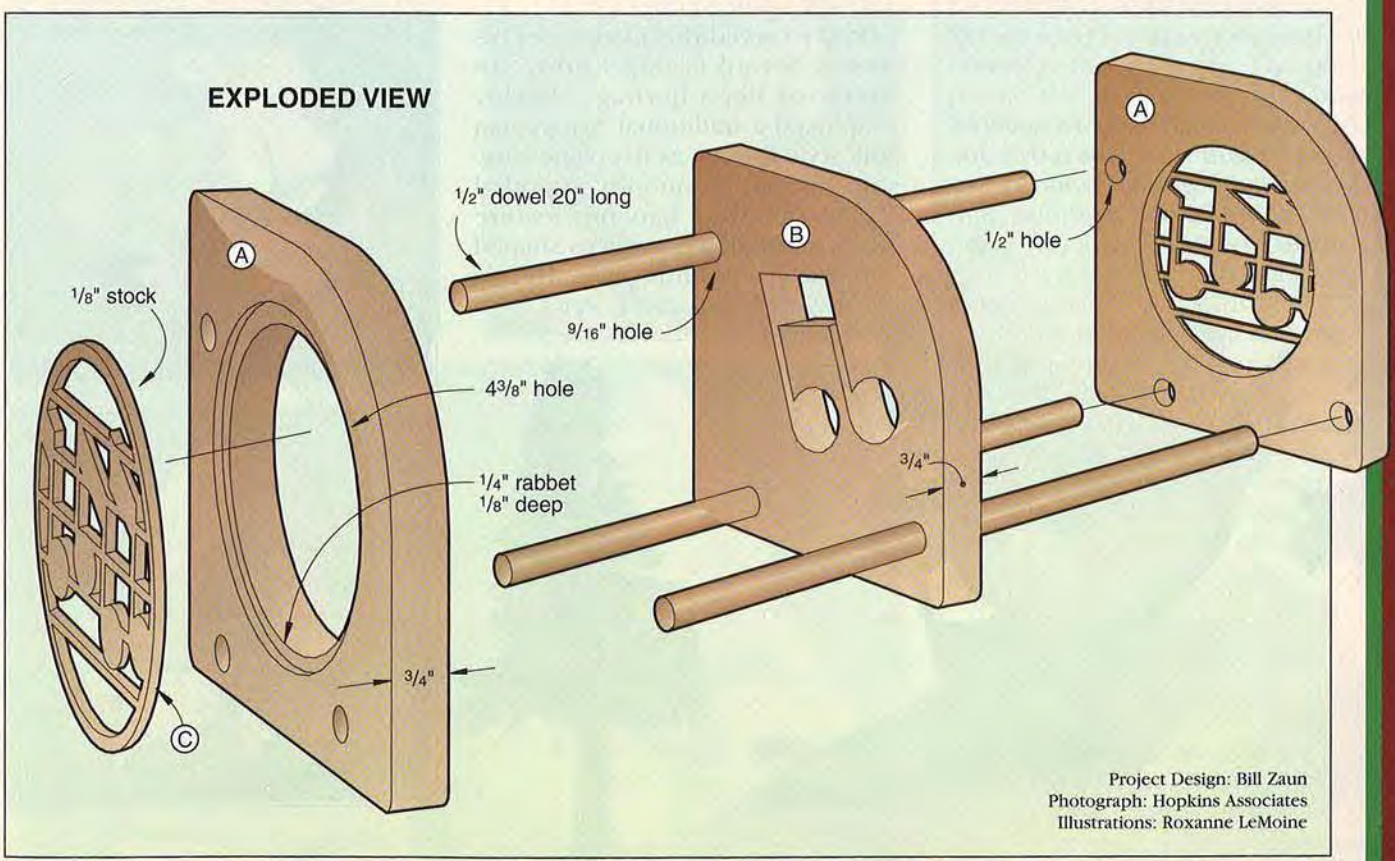

Project Design: Bill Zaun
Photograph: Hopkins Associates
Illustrations: Roxanne LeMoine

Print this article

SCANDINAVIAN SPRITE ON SKIS

Skiing and trolls have long been staples of Norwegian life and legend. Woodcarver Harley Refsal combines them in this delightful traditional-style folk carving.

Project Prep

Stock

Basswood or other carving wood 3½×4×5½" for figure, 2×4×8" for ski-slope base, skis, and tail. Twigs or 3⁄16" dowel rod for ski poles. (See the Buying Guide for a kit containing a bandsawn blank and other necessary materials.)

Tools:

Bench-type carving knife

⅛" no. 9 gouge . . . . . ⌣

½" no. 3 gouge . . . . —

½" no. 9 gouge . . . . . ◡

⅛" V-tool . . . . . ⌄

***Note:** These are suggested tools; you also can carve the troll with gouges and V-tools of other sizes and sweeps.*

Nordic sagas recounting tales of trolls go back thousands of years. Legend holds that rock-throwing fights among these mighty giants left craters that became the lakes and valleys of the rugged Norwegian landscape.

By the 1800s, trolls seemed to have shrunk in stature, becoming small enough to live under bridges. Even so, they were still pretty ornery characters; just ask the Billy Goats Gruff.

Today's trolls, tired of being typed as brutes or troublemakers, have become friendly and fun-loving, if somewhat mischievous. *WOOD*® magazine's carving consultant, Harley Refsal, met this one—named Per—on a recent visit to Norway. Instead of lurking under bridges and scaring kids, Per gets his kicks from Norway's national sport, skiing.

Harley carved this likeness of his newly found skiing buddy. In honor of Per's heritage, Harley employed a traditional Norwegian folk style known as flat-plane carving. Instead of smooth, rounded forms, flat-plane carvings feature bold, rough-hewn surfaces shaped primarily by knife cuts. Here's how you can carve Per's likeness.

Bandsaw the blanks first

Photocopy the full-sized front and side patterns for the troll from the *WOOD PATTERNS™* insert in the middle of the magazine. Adhere them to adjoining surfaces of a 3½×4×5½" carving block.

Bandsaw the side-view outline, and tape the waste pieces back onto the cutout. Then, bandsaw the front-view outline to complete the blank.

On the edge of a 2×4×8" piece of stock, draw the side view of the ski slope, shown in the *WOOD PATTERNS* insert. Bandsaw along the line. (Save the cut-off piece; you can use it later to make Per's skis, poles, and tail.) Draw the top-view outline on the ski slope, and cut it out.

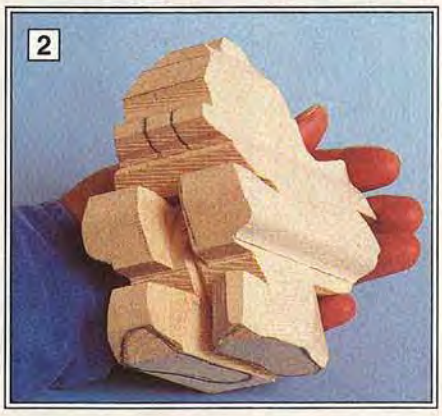

Carve a legendary Nordic character

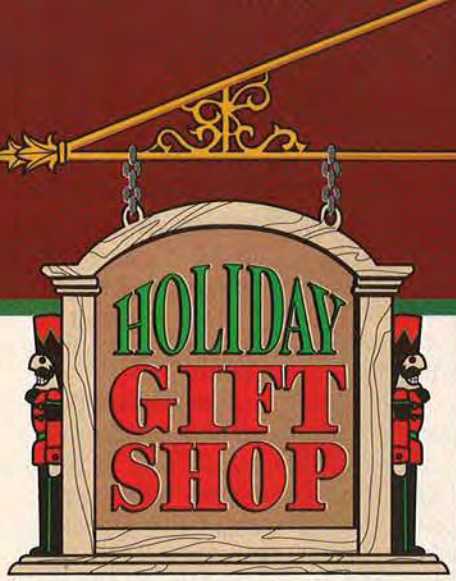

Now, start shaping the troll

Sketch lines on the sides of the bandsawn blank to show placement of the arms, hands, scarf, hat, and feet. Refer to *Photo 1* and the patterns for guidance.

On the front of the blank, draw lines to delineate the nose and separate the hands. On the back, draw lines about 1" apart on the scarf. Then, draw the feet on the bottom, placing the right one about ⅜" ahead of the left (viewed from the bottom) to give the figure a sense of motion.

Carve away the stock between the hands, using a knife or ½" shallow gouge (no. 3 or 5, for example). Cut back about ⅞" to Per's chest, as shown in *Photo 2*. On the back, cut away the sides of the scarf, leaving it about 1" wide for the time being.

Shape the feet next. Carve each to the pencil line on the bottom, and curve the front of the sole upward. The rounded front should look somewhat like a boat, as shown in *Photos 2* and *3*.

Now, rough-shape the troll's back, sides, and head. Remove stock from behind his arms to begin shaping the back and sides. Refer to the pattern lines and the photographs to get a feel for the general shape.

As you begin to shape the head, compare the sawn blank (left) and the partially carved one (right) in *Photo 5*. Then, rough in the jawline and cheeks, referring to *Photos 3* and *5*.

Draw pencil lines for the scarf wrapped around Per's neck. Bring it under his chin and along the sides of his head back to the cuff of his hat. The side view photo of the finished carving on the *next page* shows the scarf.

Carve the troll's hat to rough shape. Mark the lines to separate his socks from his shoes and knickers. In the photographs of the finished carving, the socks are light blue.

Drill holes for the poles

Before shaping the mittens, drill holes for the ski poles. The poles pierce the mittens on top about ⅜" from the front bandsawn edge and ½" from the outside bandsawn edge. Make a pencil mark at that point on each mitten, then draw lines down the front and side of the mitten to mark the hole's angle (see *Photos 4* and *5*). Angle the pole outward and backward to place the bottom end beside the ball of the foot.

Drill a 1/16" pilot hole through each mitten. Enlarge the hole to 3/16". Then, shape the mitten around the hole, using your own hand and the photos of the finished carving as models.

Next, refine the form

Further shape and define Per's ski boots and socks, separating them with a sharp V-cut. Don't try to smooth the contours as you carve to the final shape. Rather, leave a series of cut planes or facets, as

Continued

HOLIDAY GIFT SHOP

SPRITE ON SKIS

shown in the finished-carving photos *below*. This gives the distinctive look of a Norwegian flat-plane folk carving.

Carve Per's legs and body, paying attention to the separation between his socks and skiing knickers. Around his waist, separate the bottom of the sweater from the trousers. Roll the sweater under slightly, as shown in the photos.

Separate his knees with a V-cut, then round them. Carve the chest back from the knees somewhat to make Per look like he's crouched down. Carve a crease at each elbow.

Go ahead, make him smile

Before starting to carve Per's face, study the rough shape in *Photos 3* and *5* and the facial features in the front- and side-view photos of the finished carving. Then, cut away the stock outside of the the nose lines.

Draw the smile lines on the face, where shown on the carving at the right in *Photo 5*. The smile lines curve down from the sides of the nose around the corners of the mouth, almost like a pair of parentheses. They help define the cheeks.

Carve the lines with the tip of your knife. Below the lines, carve to the level of the surface beneath the nose. Blend this area into the chin. Draw a broad, smiling mouth onto the face, just below the nose. Carve the mouth as a V-cut, broader at the middle than at the corners. Adding a small triangular cut at each corner will make the smile seem even wider.

Shape Per's prominent nose, blending it into the upper lip. Separate it from the cheek on each side with a knife cut. A large V-cut coming almost horizontally across the top of the nose forms the eye area, as shown in the photos *below*.

Carve the hair at the sides of the head, then model the scarf around Per's throat. Shape the hat, and define the cuff.

Time for some details

Carve the fluttering ends of the scarf. Start by cutting a V-groove between them, as in *Photo 4*. Then, hollow the outside of each flap slightly, shaping the inside to match. Thin the top edge of the scarf ends to about ¼". This will give the entire scarf a light look. Beware of making the scarf too thin—that would weaken it. Add a few shallow V-cuts for wrinkles, and raise a small oval to represent a knot.

If you want to add the optional tail (and Harley says he's never seen a troll *without* one), drill a 1/16" pilot hole straight into the middle of your troll's waistline right below the sweater. Enlarge the hole to ¼".

Carve the tail separately from a 1×2×3" piece of stock. Trace the patterns from the *WOOD PATTERNS* insert onto the stock, and cut out the blank. Round the small end to fit into the drilled hole. Carve the large end to shape, then texture it with a series of V-cuts. Don't install the tail until after you paint both it and the carving, however.

Now, make a pair of skis for Per. Scrollsaw them from the stock, then texture the top and edges with a gouge to give them hand-carved appearance. For ski poles, gather up some small twigs. Cut off and whittle two 3½" lengths to fit through the holes in the troll's mittens. You also could use 3/16" dowel rod.

Continued on page 100

Buying Guide

Troll kit. Basswood troll blank (bandsawn front and side), ski-slope base, skis, and material for ski poles and tail, $19.95 each or $37.50 for two ppd. in U.S. Harley Refsal Woodcarving, 619 North Street, Decorah, IA 52101. No telephone orders, please.

Book. *Carving Trolls and Other Scandinavian-Style Characters*, Harley's new book featuring 20 projects, $16.45 ppd. in U.S. Order from address above.

Project Design: Harley Refsal
Photographs: Hopkins Associates; John Hetherington
Illustrations: Roxanne LeMoine; Lorna Johnson

10% to 20% OFF HOLIDAY COMBO SALE

FREE $45 IN SHARPENING COUPONS

GOOD ON ALL FORREST OR *OTHER MAKES* OF CARBIDE BLADES OR DADO SETS. EXPIRES 12-31-95.

Must mention *WOOD* magazine for discounts, coupons & bonus with purchase.

CHOPMASTER FOR SLIDING COMPOUNDS & MITER SAWS

New specs, 5° Neg. Pts. & flat, runs out less than .002 for perfect, tight, smooth, splinter-free miter joints. **TAKE EXTRA 10% – 20% OFF COMBO SALE!**

NEW SIZES AVAILABLE

	LIST	SALE
Delta Sidekick 6-1/2"x40Tx5/8"	$149	$ 89
Sears 8-1/4" & Delta 8-1/4"x60Tx5/8"	$170	$ 99
Hitachi 8-1/2"x60Tx5/8"	$179	$109
DeWalt 8-1/2" & Ryobi 8-1/2"x60Tx5/8"	$179	$109
Delta 9"x80Tx5/8"	$204	$119
Ryobi–Makita & all 10"x80Tx5/8"	$207	$129
DeWalt, Makita, B&D, Hitachi 12"x80Tx1"	$229	$139
Ryobi–Makita 14"x100Tx1"	$266	$179
Hitachi 15"x100Tx1"	$277	$189

For good general purpose cuts use Woodworker II 30T & 40T or Woodworker I. Use small stiffener where possible.

BUY 1 BLADE OR DADO AT **10% OFF** SALE PRICE
2ND BLADE **20% OFF** (EQUAL OR LESSER VALUE)
15% OFF DADO AS SECOND CHOICE.

WOODWORKER II

With this one ALL PURPOSE blade you can RIP & CROSSCUT 1"–2" ROCKHARDS and SOFTWOODS resulting in a **SMOOTH AS SANDED** surface. PLY-VENEERS of OAK and BIRCH will crosscut with NO BOTTOM SPLINTER at moderate feed rates.

- DOUBLE HARD and 40% STRONGER C-4 CARBIDE
- Ends blade changing
- Ends scratchy saw cuts
- Ends second-step finishing
- Ends cutting 1/16" oversize to allow for RESURFACING
- **BUY AND SHARPEN 1 BLADE INSTEAD OF 3**

5/8" holes, boring thru 1-1/4" add $7.50. Larger at Time Basis —Shipping $4.50

WOODWORKER II	LIST	SALE	10%	20%
14"X40TX1"	$215	$149	$134	$119
14"X30TX1"	$195	$139	$125	$111
12"X40TX1"	$183	$129	$116	$103
12"X30TX1"	$162	$119	$107	$ 95
10"X40TX1/8" or 3/32"	$156	$119	$107	$ 95
30T 1/8" or 3/32"	$135	$ 99	$ 89	$ 79
9"X40T	$146	$109	$ 98	$ 87
30T	$125	$ 99	$ 89	$ 79
*8-1/4"X40TX 3/32"	$136	$ 99	$ 89	$ 79
8"X40T 3/32"	$136	$ 99	$ 89	$ 79
30T	$115	$ 89	$ 80	$ 71
7-1/4"X30T 3/32"	$112	$ 69	$ 62	$ 55
**6"x40T 3/32"	$136	$ 89	$ 80	$ 71

*NEW for Sears & Makita Table Saws **New For Saw Boss

WOODWORKER I – For TABLE and RADIAL SAW

This trim and crosscut ALL PURPOSE blade gives scratch-free polished cuts on all materials RIP or CROSSCUT UP TO 2".

- ALL 60T AND 3/32" THIN KERF 30° ATB and 5° face hook on 10" diameter and under. 12" and 14" are 20° ATB 1/8"K.
- DOUBLE HARDER and 40% STRONGER carbide.
- THIN KERF: Saves 1/3 wood loss on each cut, radial or table. Feeds easy when used for moderate rip and crosscut on table saw. Reduces "JUMP IN" for better "PULL CONTROL." Practically eliminates bottom splinter on RADIAL CROSSCUT.
- Totally stops ALL bottom and top splinter on ply veneers in push-cut mode on RADIAL.
- Our STIFFENER STRONGLY RECOMMENDED AGAINST outside blade for best cuts. Made and serviced in U.S.A. for your benefit.

	LIST	SALE
14"x60Tx1" 1/8"K	$224	$159
12"x60Tx1" or 5/8" 1/8"K	$198	$139
10"x60Tx5/8" 3/32"K	$162	$129
9"x60Tx5/8" 3/32"K	$156	$119
8"x60Tx5/8" 3/32"K	$150	$109
NEW!		
8-1/4"x60Tx5/8" 3/32"K	$150	$109
7-1/4"x60Tx5/8" 3/32"K	$150	$109

RYOBI RA200
SEARS TS200
MAKITA 500B NBA
HITACHI PSM8
PORTER CABLE 368-1

SPECIAL COMBO SALE EXTRA 10%-20% OFF

THE ONE BLADE THAT LEAVES A SMOOTH-AS-SANDED SURFACE!

BUY OUR BEST SELLER 10" X 40T FOR ONLY $119 PLUS EXTRA 10%–20% OFF FOR COMBO SALE!

RECEIVE WITH EVERY FORREST BLADE OR DADO LISTED, 9 SHARPENING COUPONS WORTH $5.00 EACH!

ONLY **$62 or $50** NET COST TO YOU AFTER USING SHARPENING COUPONS

Outperformed 36 other premium blades, both foreign and domestic! WOOD® Magazine test, Sept. '93, pg. 45

TRY A FORREST CARBIDE BLADE TODAY!

NEW DELUXE DADO-KING!

FROM THE LEADER—20 yrs. IN DADO TECHNOLOGY!

"No tearout on all five woods tested"
(INCLUDES MELAMINE)
Fine Woodworking J/A '91, page 51 "Best Value" WOOD Magazine, Oct. '91, pg. 62,63

- **NEW 3/32" CHIPPER** - allows twice as many groove widths to match thin plywood
- **FREE SHIMS INCLUDED**
- **NO SPLINTERING** - when cross-cutting oak, ply-veneers, and melamine
- **PERFECT FLAT BOTTOM GROOVES** - not staggered steps or round-bottoms like a wobble-dado leaves
- **CUTS IN ALL DIRECTIONS** - rip, cross-cut, miter any depth
- **CUTS ALL SIZED GROOVES** - 1/8" through 29/32" in 1/32" increments
- **SUPER-HARD CARBIDE** - gives up to 300% longer life, especially good on plywoods and abrasive particle boards

Dado *FOR AS LOW AS* **$184** *(NET COST AFTER USING SHARPENING COUPONS)*

Here is why this great Dado Head has no equal!

C-4 Carbide Tips — 24 on each saw blade — twice as many as most competitors!

C-4 Carbide Tips — 4 on each chipper with special negative face hooks.

	LIST	SALE	10%	15%
6" D. 5/8" Bore **NEW**	$299	$269	$242	$229
8" D. 5/8" Bore	$321	$289	$260	$245
10" D. 5/8" & 1" Bore	$389	$349	$314	$297
12" D. 1" Bore	$499	$449	$404	$382

(Bore up to 1-1/4" Add $25 — Plus $5.50 S&H)

DURALINE HI-A/T FOR TABLE & RADIAL SAWS ALL FLAT FACE

5/8" HOLES. Boring up to 1-1/4" $7.50 extra. Larger holes–time basis. Shipping $4.50.

Faster feed rates & absolute splinter control. Stops splintering on OAK/BIRCH PLY VENEERS & MELAMINE.

SIZES AVAILABLE	LIST	SALE	SIZES AVAILABLE	LIST	SALE
7-1/4"x60Tx3/32" K	$149	$129	12"x100Tx1-1/8"K	$253	$215
8"x80Tx1/8" & 3/32" K	$202	$169	14"x80Tx1"	$232	$197
9"x80Tx1/8" & 3/32" K	$207	$179	14"x100Tx1"	$266	$226
10"x80Tx1/8" & 3/32" K	$207	$159	16"x80Tx1"	$262	$223
12"x80Tx1-1/8"K	$212	$181	16"x100Tx1"	$294	$243

SPECIAL COMBO SALE EXTRA 10%-20% OFF

Above 1" bore standard.

CARBIDE IS THE HARDEST OF THE C-4 GRADES AND 40% STRONGER, NOT WEAKER! FOR 50% TO 300% LONGER LIFE.

Standard C-2 Carbide (below, left) and FORREST **still sharp** Oxidation and Corrosion Resistant Sub-Micron C-4 Carbide (below, right). Each shown after cutting 3,500 feet of MDF. Similar results obtained cutting particle board, melamine, and plywood.

STILL SHARP AFTER 3,500 FEET OF CUTTING!

BLADE DAMPENERS-STIFFENERS

FOR BETTER CUTS on all brands of blades, use our large 1/8" DAMPENERS-STIFFENERS against one side.

- **Parallel and flat to .001**
- **Stop vibration, flutter, cutting noise, and blade ring**
- **Tryable and returnable for full cash refund.**

4"	$21
5"	$24
6"	$25

7" AND LARGER AVAILABLE

FULL RANGE OF OTHER INDUSTRIAL SIZES

REDUCES NOISE 50%–75%

WE RECOMMEND OUR FACTORY SHARPENING as some local sharpening creates problems with **MICRO-CHIPPED EDGES** reducing blade life & cutting quality.
3-5 DAYS ON THESE AND ALL MAKES OF FLAT FACE & CONCAVE CARBIDE TIP SAWS. Ship via UPS. Typical 10x40T $15.00, 60T $17.75. Add return UPS $5.00, $1.00 each additional blade.

FOR SPECIAL PRICE COUPONS AND BONUS MENTION *WOOD*® MAGAZINE.

We honor AMEX, VISA, MasterCard & Discover, Money Orders, Personal Checks, and CODs. Specify Dept. WD when ordering.

PHONE TOLL FREE! 1 (800) 733-7111
(In NJ: 201-473-5236) FAX: 201-471-3333

Quality is why we're different!

FORREST

BUSINESS OPEN ACCOUNTS AVAILABLE

VISA MasterCard DISCOVER

CA, FL, NJ, NY, PA Residents Please Add Sales Tax
SATISFACTION GUARANTEED OR FULL CASH REFUND.
Fine American saw making & sharpening since 1946.

DEALER INQUIRIES WELCOME

FORREST MANUFACTURING COMPANY, INC. • 461 RIVER ROAD, CLIFTON, NJ 07014 • TOLL FREE 1 (800) 733-7111

CRAFTSMAN-STYLE SHELF

In the Mission Tradition

Quartersawn oak, craftsman-style square buttons, and the simple lines of mission style make for a striking shelf bound to please the most discriminating palate.

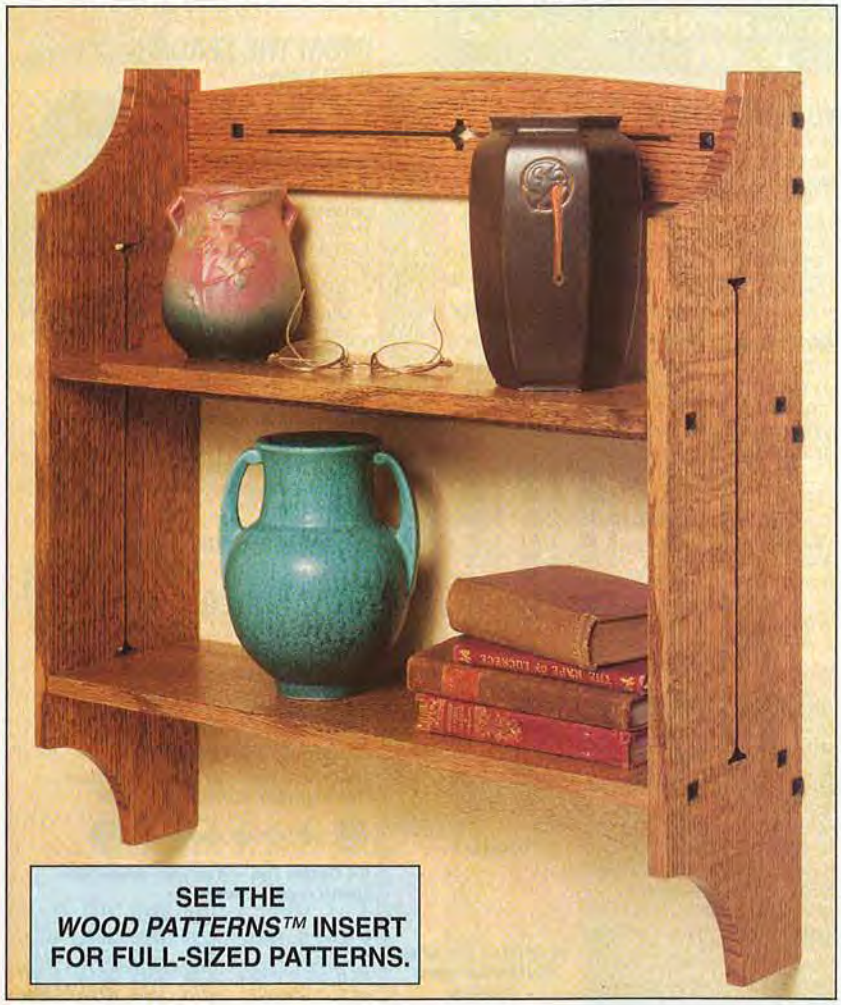

Cut all the pieces (A–D) to size and shape. See the *WOOD PATTERNS™* insert in the center of the magazine for full-sized patterns of parts A and B. Rout the straight portions of the decorative cutouts in the sides (A) and top (B) using a ⅛" straight bit in a table-mounted router fitted with a fence (you could also use a scrollsaw). Then, scrollsaw to shape the ends of the routed cutouts in the side pieces and the center of the cutout in the top piece. Drill the mounting holes and assemble. See the article on *page 67* for our process on making your own craftsman-style buttons.

Bill of Materials

Part	Finished Size T	W	L	Matl.	Qty.
A sides	½"	5½"	20"	QO	2
B top	½"	3"	18"	QO	1
C shelves	½"	5½"	18"	QO	2
D shelf supports	½"	⅞"	18"	QO	2

Material Key: QO-quartersawn oak.

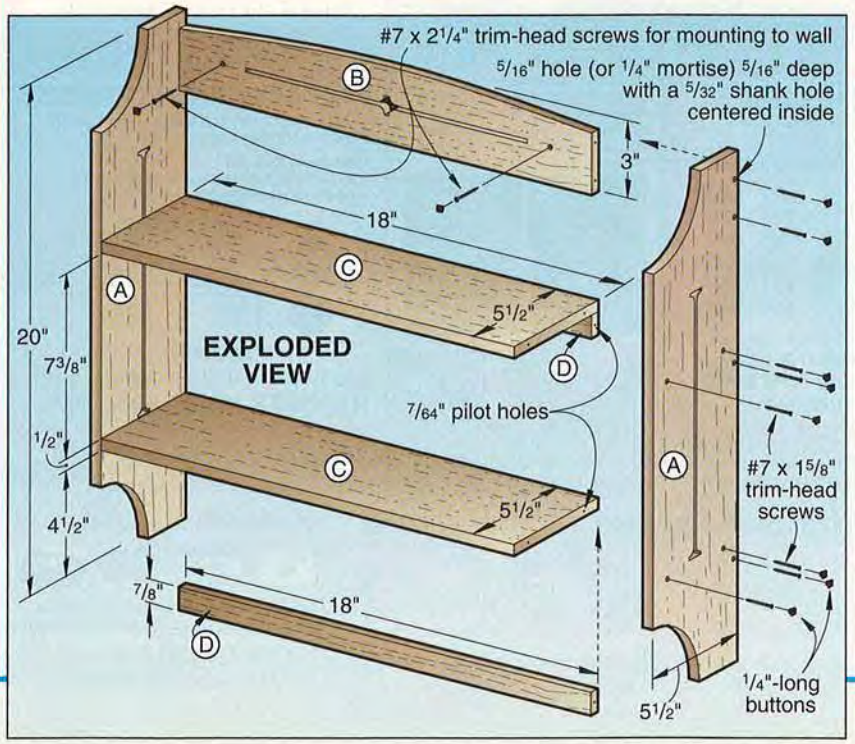

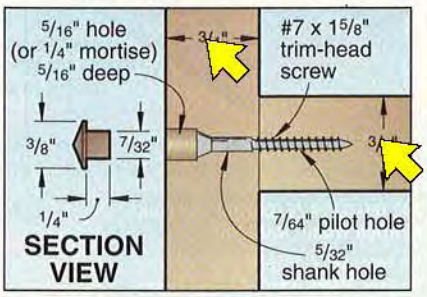

Project Design: James R. Downing
Illustrations: Lorna Johnson Photograph: King Au

"the place wise woodworkers shop"

ROCK BOTTOM PRICES ON ALL YOUR FAVORITE TOOLS

PORTER-CABLE

556 Biscuit Joiner $132

100	7/8 hp Router	103
1700	HeatGun	73
2620	3/8" Drill 4.5 amp	85
2621	3/8" Keyless Drill	85
310	Laminate Trimmer	143
312	Offset Trim Router	157
332	RO Sander	65
347	7" Circular Saw	128
743	7" Left hand saw	128

361	3X24 Belt Sander	185
363	4X24 Belt Sander	195
410	Betterly™ Underscribe	147
411	Betterly™ MiterFold	164
447	7-1/4" Framer Saw	133
5008	12" Dovetail Jig	76
511	Door Lock Kit	138
5116	16" Dovetail Jig	256
6611	3/8" Drill 5.5 amp	123
6614	1/2" Drill	127
6615	1/2" Keyless Drill	132
666	3/8" Drill	124

690	1-1/2 hp Router	138
693	1.5hp Plunge Router	168
6931	Plunge Base	72
695	Router Table w/motor	219
696	Router Table only	127
7116	24" Doevtail jig	292
7399	Drywall Cutout	78
7403	7" Sander	178
7518	Vari Sp 3 hp Router	266
7519	3 hp Router	232
7536	2 hp Router	203

345 6" Saw Boss $103

7537	2 hp D-Handle Router	212
7538	3 hp Plunge Router	239
7539	VS Plunge Router	268

7549	Jig Saw	133
7800	Drywall sander	326
7810	Vacuum	257
9118	3 1/4" Planer Kit	212
9314	Trim Saw Kit	153
9345	Sawboss w/ case	123
9690	1.5 hp Router w/case	144
96645	Screwgun w/ case	128
97310	Trimmer Kit	197
973355	RO Sander w/case	117
9743	7-1/4" Saw Kit	139

Great New Tools and Specials From PORTER-CABLE

PROFESSIONAL POWER TOOLS

9444	NEW 25 pc Profile Sander Kit	113
444	Profile Sander only	84
347K	7" Circular Saw RH with case	127
347K	7" Circular Saw LH with case	127
7499	NEW Cutout Tool	62
973555	5" Random Orbit Sander with Case and Dust Hood	147
973666	6" Random Orbit Sander with Case and Dust Hood	153

Makita

LS1211 12" Compound Miter Saw $798

2012	12" Planer	538
2414B	14" Cutoff Saw	224
2708W	8 1/2" Table Saw	297
3612C	NEW VSPlunge R'ter	279
3901	NEW Biscuit Joiner	208
5007NBK	7-1/4" Circ. Saw	127
5090DW	3-3/8" Cordl's Saw	144
5090D	tool only	80
5402A	16" Beam Saw	528

6211DWHE	NEW Cordless	194
6311DWHE	NEW Cordless	204
6406	3/8" Drill	53
9820-2	Sharpener	208
9901	3 X 21 Belt Sander	129
9924DB	3 X 24 Belt Sander	183
BO4510	Square Pad Sander	49
BO5000	Random Orbit Sander	68
JR3000V	Recip-Saw	138
LS1030	10" Miter Saw	205
1912B	NEW 4 3/8" Planer	189
N1900B	3" Planer Kit	129
N9501B	Mini Grinder Kit	98

BATTERY SPECIAL

9.6 V "Black" Battery	23.50
7.2 V "Black" Battery	22.00
12 V "Orange" Battery	39.00
ML900 9V Flashlight	36.00

AIR MAKITA

AN8300	Framing Nailer	439
AN451	Coil Roofer Nailer	398
AF501	Brad Nailer	277

Makita

MAC1000	1-1/2hp Compressor	299
MAC2000	2hp Oilless Compr'sst	354

Milwaukee

0225-1	3/8" Magnum Drill	$123
0228-1	3/8" 0-1000rpm Drill	111
0229-1	3/8" Keyless Drill	111
0234-1	1/2" Magnum Drill	130
0236-1	1/2" Magnum Kit	154
0238-1	1/2" 0-850rpm Drill	128
0239-1	1/2" Keyless Drill	128
0244-1	0-600 rpm Magnum	130

0375-1	3/8" Close Qtr Drill	134
0379-1	1/2" Close Qtr Drill	148

0407-1	Cordless Drill Kit-2batt	172
0422-1	12V Cordl's HammerDrill	245
0567-1	Drain Cleaner	234
3300-1	Rt Angle Drill	193
3107-1	VS Rt Angle Drill	218
5192	Die Grinder	174

DeWALT

DW682K Biscuit Joiner $218

DW100	3/8" Drill	67
DW106	3/8" Keyless Drill	73
DW411	Palm Sander	58

DW930K	Cordless Saw	198
DW935K	Cordless Saw	219
DW972K2	12V Cordless drill	188
DW974K	14V Cordless drill	198

DeWALT

DW705 12" Compound $358

6494 10" Compound Miter $315

5362-1	1" Hawk Hammer	328
5365-1	1" Hawk Hammer Kit	348
5369-1	3/4" D-handle Falcon Kit	238
5371-1	1/2" Hammer Drill	178
5375-1	1/2" Hammer Drill Kit	187
5392-1	3/8" Hammer Drill	126
5397-1	3/8" Hammer Drill Kit	148
5460	7" Polisher	174

Milwaukee

5682	2 Hp Router	168
5936	4 x 24 Belt Sander	227
6008	1/3 Sheet Sander	123
6010	1/2 Sheet Sander	127
6142	4 1/2" Grinder Kit	123
6148	NEW Mini Grinder	96
6175	14" Chop Saw	278
6266	NEW!! Jig Saw	187
6365	7-1/4" Circular Saw	121
6366	6365 w/Carbide bld	128
6368	7-1/4" Saw Kit	138
6460	10" Circular Saw	268
6491	10" Miter Saw w/80t Bld	278
6527	VS Super Sawzall	171
6528	VS Super Sawzall	169

Milwaukee

6539-1	Inline Screwdriver	74
6546-1	2 spd Inline Screwdriver	81
6758-1	Drywall Screwgun	98
6767-1	Screwdriver Kit	137
8975	Heat Gun	58
8980	Heat Gun Kit	91

6535 Dual range VS Sawzall $115

freud

94-100 5 pc Router Bit Cabinet set $158

JS102	New Biscuit Joiner	178
EDS132B	13V Cordless Drill	208
TR215	8"Compound MiterSaw	359
LU85M010	10" 80T Finish	58
LU84M011	10" 50T Combo	40
LM72M010	10" 24T Rip	38
LU85M015	15" 108T Finish	99
LU82M010	10" 60T Chipboard	45
LU89M010	10" 72T Aluminium	57
LU92M010	10" 60T Corian®	58
LU98M010	10" 80T Laminates	67
LU73M010	10" 60T Crosscut	45

Construction Master IV

The *NEW!!!* world's best feet-inch-metric-fraction calculator. Solves rafters hips, valleys, stairs

$69

Pockethole maker $109.95

KREG JIG for joining faceframes, butt joints and other pocket hole applications

K2	two hole	109.95
K1	one hole	99.95
Extra Drill bit		15.95
Face Clamp		15.95
100 Screws		3.25
Driver Bit		2.95

BIESEMEYER

T50	50" Commercial Fence	$298
HS52	50" Home Shop	238
HS40	40" Home Shop	208
Miter saw Stop		69

7pc Forstner Bit Set
7pc Countersink Set
7pc Bradpoint Set
your choice
$17.95

HITACHI

C8FB2 COMPOUND SLIDE SAW $577

$30 rebate on C8FB call for details

C10FA	10" Miter Saw	269
C10FC	10" Comp'd Miter	258
C10FS	10" Slide Miter	739
C15FB	15" Miter Saw	669
NR83A	Framing Nailer	398

Clamp 'n Tool Guide		Back-to-Back Bench Clamp	
50C	$ 29.50	BB50	$ 45.95
36C	26.50	BB36	37.95
24C	22.50	BB18	31.95

Panasonic

EY6100EQK *NEW! PREDATOR 12 V CORDLESS DRILL* IRONMAN $198

EY6100EQKW *PREDATOR* IRONMAN w/2 Batteries 224

EY6100CQKW *PREDATOR* 15Min.Charge w/2 Batteries 198

SMARTLEVEL

SL224	2' economy Level	$ 54
SL248	4' economy Level	64
PR24S	2' Pro Level w/case	88

AEG

STSE380	Jig Saw	59
VS280	1/2 sheet sander	39

6 in 1 Screwdriver

$4.95

BOSCH

1581VS $144 VS Orbital Jigsaw

3283DVSK	RO Sander Kit$	117
B4050*New!*	Inline Jig Saw	113
11212VSR	SDS Hammer drill	212
1347A	Mini Grinder	99
3310K	NEW Cordless	193

BLACK&DECKER

2872K2 *with 2 batteries* **12V $188**

2874K 14.4V $208

1180	1/2" Drill	118
2037	Drywall Screwgun	94
2037W	Drywall gun w/50ft cord	119
2038	HD Screwgun	94
2660	Drywall Screwgun	86
2670	1/2" Impact Wrench	149
2721	1.5hp Router 1/2" collet	148
3105	Reciprocating Saw	148
3339	3hp VS Plunge Router	268
4075	7" Wildcat Grinder	165

DELTA

37-070 $247 6" Table Top Jointer

14-650	Hollow Morise Chisler	285
17-960	Oss.Sander Kit	83
22-540	12" planer	384
28-180	10" band saw	156
31-080	1" Belt 5" Disc Sander	88
31-340	1" Belt 8" Disc Sander	203
31-460	4" Belt 6" Disc Sander	126
32-100	Plate Joiner	254
36-040	8" Compound Miter	149
36-090	Sidekick 10" Miter Saw	218
36-210	10" Compound Miter	248
36-250	NEW Compound Slide Saw with stand	558
40-150	15" Scroll Saw	115
40-560	16" Scroll Saw	177
40-640	20" Scroll Saw	298
35-617	10"x50T Carbide Blade	34
35-677	14"x108T Carbide Blad	75

SANDPAPER

STIK-ON

Grit	10 yards 4 1/2"roll	DISCS pieces	6"round	5"round
60	N/A	100 pc	12.95	11.95
80	9.95	100 pc	11.95	10.95
100	8.85	100 pc	10.95	9.95
120	8.85	100 pc	10.95	9.95
150	8.85	100 pc	10.95	9.95
180	8.85	100 pc	10.95	9.95
220	8.85	100 pc	10.95	9.95

hook& loop

any grit 10 pcs $3.95

triangle sanders

Ryobi	30 pc assorted	$4.25
Fein	30 pc assorted	6.95
Bosch	50 pc assorted	10.50

FEIN Detail Sander

Kit w/case & paper $188
Scraper Blade attachment 15.95
30 pc assorted PSA paper 6.95

STABILA

LEVELS - Hand holes. Two vertical vials. Two milled faces. Yellow coat.

2464	24" w/ hand hole	44
2469	36" w/ hand hole	46
2467	48" w/ hand hole	49
2468	72" w/ hand hole	104

2859	NEW Laser Level	325

2699	6 ft —3vial	99
2700	6 ft 6"—3vial	115
2701	8 ft —3vial	125

RYOBI

OSS450 Spindle Sander $159

AP10 Replacement Blades		24.95
BS900	NEW! 9" Band Saw	165
DP80	8" Drill Press	99
DS1000	Detail Sander	39
DC500	Detail Carver	62
J60VK	JigSaw Kit	85
TRMK2	Trimmer w/ 2 bases	99
RJ100VK	Reciprosaw	99
RS115K	RO Sander Kit	69
SC162	Scroll Saw	119
SC162VS	VS Scroll Saw	165
TS254	10" Miter Saw	197

AIRY

NAIL GUNS

241SK

18 G 3/8-1-1/2"Kit		$98
EZ1	shoots pins & staples	98
250SK	18 G 3/4- 2" Kit	164
350K	16G 3/4- 2" Kit	194
565T	1- 2-1/2" Finish Gun	204
626SK	1/4"Crown 1" StaplerKit	104
8290	6d-16dFrming Nailer	314

Emglo

AIR COMPRESSORS

AM39HC4V 3/4 HP- 2 tank$	293
AM78HC4V 11/2 HP-2 tank	307
AM78DOLHC4VNew! Oilless	307

SENCO

SFN2B Finish Nail Gun 1 1/2" to 2 1/2" only **$359**

Rol-Air

COMPRESSORS
D1500HP5 1.5 hp
4.5 gal tank
$307

USE VISA, MC, DISCOVER
FREE SHIPPING on orders from this add over $50. Within continental 48 states, HI and AK extra. Sales limited to stock on hand.

ABBEY TOOLS

1-800-225-6321

1132 N. MAGNOLIA, ANAHEIM CA. 92801
OPEN 8-5:30 WEEKDAYS 9-2 SATURDAY
Calif. residents add 7.75% state sales tax
SERVING YOU FOR OVER 18 YEARS
Prices subject to change without notice.

Circle No. 2

Woodworker's Marketplace

Dunham Hardwoods
Specializing in Red Oak

- Kiln Dried Exotics & Domestics
- 22 Species in various thicknesses and grades
- Example: 4'-6' Clear selected for color 4/4 Red Oak surfaced & straight lined one edge
- $2.55/bd. ft. (100' orders) $2.75/bd. ft. (20' orders)
- Finishes, wood pegs, buttons, hardwood dowels, etc.
- Shipped UPS or common carrier

Call or Write For Free Information

Phone: 712-643-5320 3385 130th St.
FAX: 712-643-2142 Dunlap, IA 51529

Circle No. 530

SCROLL AMERICA
Scroll Saw Seminars

- Locations throughout U.S. and Canada
- Personalized, 'hands-on' instruction

Call 1-800-322-2226
for FREE brochure!
(please tell operator your code is 712)

Circle No. 2800

FREE TOOL CATALOG!
Your Best Work Starts With Us!

With over 4,000 of the finest woodworking tools in the world, Woodcraft can help you work more efficiently and skillfully than ever. Call for your Free copy today.

1-800-542-9115
WOODCRAFT®
210 Wood County Industrial Park Dept. 95WI12T
PO Box 1686, Parkersburg, WV 26102-1686

Circle No. 955

For that "SPECIAL" project
Made In Tennessee

IN STOCK
NO MINIMUM
VARIOUS WOODS

FREE COLOR CATALOGUE

Kits Ready to Assemble & Finish

Adams Wood Products™ L.T.D., L.P.
974 Forest Dr., Dept. M36
Morristown TN 37814 • Phone (423) 587-2942

Circle No. 1002

Be a Furniture Restoration Specialist
Discover Minuteman

Complete Shop Concept
Strip • Repair
Touch-Up • Fake Grain
Marbelize • Resilver • Refinish
Duplicate Parts • Repair Frames • Veneer

Why Minuteman?

- Proven, Low-Risk, Cash Return
- **Low Start-Up Costs; Expert Training**
- Environmentally Friendly System
- **Wholesale Supplies**
- Handy Sample Kits Available
- **Systems From $1,500-$11,000**
- 28 Years Experience; 3,000+ Shops

No Experience Necessary
◆ Part-Time, Full-Time ◆
Ideal for Men & Women

***FREE* 2-Day Business Exploration Seminar**
No Obligation to buy!
Register Now – Limited Seating!

Call For FREE Catalog
MINUTEMAN, INC.
Ste. 17, P.O. Box 8, Waterloo, WI 53594
1-800-733-1776

Circle No. 1661

Big Kids Playhouse
180 sq. ft $12.95

12 Tree Ornaments Unique Designs $9.95

Cadillac of Catalogs 2,000 plans only $4.00

Santa's busy Workshop $16.95 with arm that moves

Creativecraft Plans - 11420 E. Bayhill Way
Ste. 512 - Indianapolis, IN 46236
1-317-823-2139 add $4.00 S/H

Circle No. 330, 331

Wood Toys Made Easy
Fully Assembled Toys, Complete Kits, Parts or Just Patterns

Send $2.00 for catalog
910.593.3734

The Lit'l Old Toy Maker
P.O. Box 100 Lawsonville, NC 27022

Circle No. 1060

Print this article

Woodworker's Marketplace is a section of advertisers offering products by mail. Please contact the advertisers directly or use the number below each ad to request information through the Woodworker's Resource section.

OWN A MACHINE SHOP

Do your own machining and shop work with a Smithy 3-in-1 Lathe • Mill • Drill

FIX IT YOURSELF!

- Easy to use!
- Save Money!
- Save Time!
- As low as $895

For *FREE* Catalog Call:
1-800-345-6342
(Ask for operator Wood)

Smithy®
or write:
Smithy Dept. Wood
PO Box 1517
Ann Arbor, MI 48106-1517

Circle No. 99

Build "Merrilegs"

Full-size Plan #121 $17.50 (catalog free with order)

SEND TODAY!

CATALOG
200 full-size professional furniture plans — $3.00

Full-Size Professional Plan

FURNITURE DESIGNS, INC., Dept. BZ-125
1827 Elmdale Ave., Glenview, IL 60025 – 1-800-657-7692

Circle No. 345

CONVERTIBLE SUNSPACE

INSULATED WINTER SUNROOM CONVERTS TO A SUMMER SCREEN ROOM!

MOUNTS READILY ON DECKS, PATIOS, OR TIES.

SUN-PORCH® DIVISION

Send $2 for Color Catalogue, Prices, SENT FIRST CLASS MAIL.

VEGETABLE FACTORY, INC.,
P.O. Box 1353, Dept. WOO
Stamford, CT 06904-1353

Circle No. 2078

Wood Moisture Meter

Professionals and hobbyists can choose from 8 different Mini-Ligno moisture meters:

Versatile
Affordable
Sturdy!
Over 100,000 units sold.

Also introducing
New Mini-Ligno XL

For brochure contact:
Lignomat USA, Ltd. PO Box 30145
503/257-8957 800/227-2105 Portland, OR 97230

Circle No. 1250

NEW! HIGH-SPEED EMBOSSING MACHINE

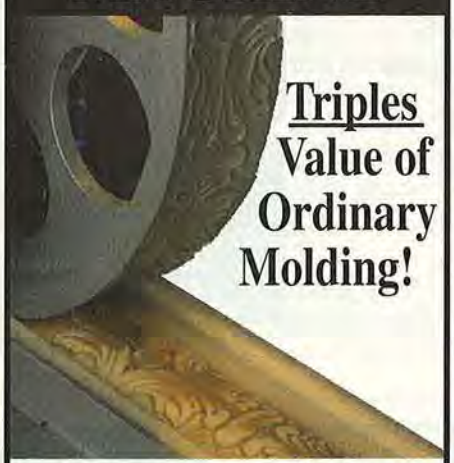

Triples Value of Ordinary Molding!

Woodmaster's new embossing machine can be the start of your own high-profit millwork business . . .or a welcome addition to your existing operation.

Embossed molding sells for $1 to $6 per lineal foot. You can produce this millwork at 26 feet per minute! Choose from hundreds of patterns including picture frames.

Call or write today for free facts:
1-800-821-6651 ext. AC3
Woodmaster Tools, Inc., Dept. AC3
1431 N. Topping Kansas City, MO 64120

*FREE PLANS for Woodworkers

*FREE Plans for:
- Sliding Glass Door Lock
- Yard Whirlygig
- Trapeze Tumbler
- Two Table Saw Cars
- Dalmatian Decoration

*Send $2.00 for our catalog and we will include a FREE project plan featuring full sized patterns for six different projects ($7.99 value). Our catalog offers over 400 woodworking plans for furniture, country projects, toys, lamps, whirlygigs, and many other indoor and outdoor projects. We are the #1 plan source for the woodworking hobbyist.

☐ I am enclosing $2.00. Please send catalog and plans for six projects.

Name

Address

City State Zip

Meisel Hardware Specialties
P.O. Box 70 B12
Mound, MN 55364-0070

Circle No. 401

P.V.C. BIRD FEEDERS
5 Different Sizes
Plan #56
.....$9.95

P.V.C. FINCH FEEDER & STAND
Plan #69
.....$4.50

Add $3.00 S & H

Specialty Furniture Designs
797 W. Remus Rd., Dept. W-36
Mt. Pleasant, MI 48858
1-800-892-4026

Color Catalog $3.00 Free with order

MI residents add 6% sales tax.

Circle No. 445

Woodworker's Marketplace

NEW!

HOW TO INTARSIA BOOK

You can easily make this Intarsia eagle on a scroll/band saw with expert Judy Gale Roberts. Informative illustrated PLUS 13 patterns for pictures, fancy boxes, signs and much more!

over 100 color photos!
Small Intarsia Projects You Can Make
only $14.95 + $2.00 S&H

Satisfaction Guaranteed

Please send check or money order to:
Fox Chapel Publishing
Box 7948B, Lititz Pike
Lancaster, PA 17604-7948
Toll Free 1-800-457-9112 (Visa/MC)
Free catalog with order

Circle No. 1123

SHAKER PEGS
CANDLE CUPS
MUG PEGS

$15.95 per 100, prepaid.
Wide selection of other wood products.
Catalog $1.00 or free with order.

Benny's Woodworks
P.O. Box 840, Dept. WD80
Shelbyville, TN 37160
1-615-684-8995 • 1-800-255-1335

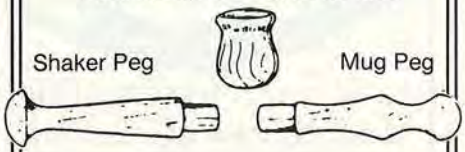

Circle No. 810

FREE BROCHURE!

★THE WOODWORKING SHOWS★
tools • supplies • education

VISIT THE SHOW NEAR YOU!

•Albuquerque	•No. California	•Salt Lake City
•Columbus	•North Jersey	•San Diego
•Detroit	•Oklahoma City	•So. California
•Indianapolis	•Omaha	•St. Louis
•Kansas City	•Pittsburgh	•Washington, D.C.
•Milwaukee	•Quad Cities	•*plus others!*

Call for free brochure
Monday - Friday 8:30 am - 5 pm Pacific Time
1-800/826-8257 or 310/477-8521

Circle No. 2900

STEVE WALL LUMBER CO.

Quality Hardwoods and Woodworking machinery For The Craftsman and Educational Institutions

				UPS Specials
Ash	4/4	Select	2.15	$ 69.00
Basswood	4/4	Select	1.80	$ 59.00
Birch	4/4	Select	2.25	$ 71.00
Butternut	4/4	1C	2.00	$ 61.00
Cherry	4/4	Select	3.40	$ 85.00
Hickory - Pecan	4/4	Select	1.85	$ 63.00
Mahogany (Genuine)	4/4	Select	3.40	$ 88.00
Maple (Hard)	4/4	Select	2.40	$ 73.00
Maple (Soft)	4/4	Select	1.80	$ 61.00
Poplar	4/4	Select	1.55	$ 56.00
Red Oak	4/4	Select	2.35	$ 72.00
Walnut	4/4	Select	3.25	$ 87.00
White Oak	4/4	Select	2.30	$ 71.00
Cedar (Aromatic Red)	4/4	1C+Btr.	1.55	$ 58.00
Cypress	4/4	Select	2.15	$ 66.00
White Pine	4/4	F.G.	1.10	$ 47.00
Yellow Pine	4/4	Clear	1.60	$ 57.00

Above prices are for 100' quantities of kilndried rough lumber sold by the Bd. Ft. FOB Mayodan, NC. Call for quantity discounts. Other sizes and grades available.

Above prices are 20 bd. ft.bundles of clear kilndried lumber 3"-10" wide • 3'-7' long (Random widths & lengths) Surfaced 2 sides or rough. Delivered UPS prepaid in the Continental U.S.

LOG RUN SPECIALS
100 bd. ft. Bundle
4/4 Cherry $120
4/4 Walnut $140
Add $20 for S2S
Motor Freight Only
FOB Mayodan

STEVE H. WALL LUMBER CO.
BOX 287
MAYODAN, N.C. 27027
910-427-0637
1-800-633-4062
FAX 910-427-7588

Send $1.00 For Lumber Catalog

Circle No. 592

Holiday Lawn Ornaments

Plan #216 $8.50

Catalog Available
Reindeer Plan #218 $8.50

Order Toll Free 800 292 8296

You can quickly make these delightful creations from plywood for your yard. Full size plan with painting instructions. Each is about 25" wide x 42" tall. **SAVE** if you order both plans: pay just $15.00 and we will also send you **FREE** a mini tabletop deer plan. **Order Plan Set # C-8 for $15.00**

Armor Box 445 A East Northport NY 11731

Circle No. 315

SCROLL SAWING
Tips, Techniques, and Shortcuts

LOOK AT WHAT YOU'LL GET:
- An instructive 45 minute video
- Close-ups of each technique
- A pattern book with 100+ full-size projects
- Computer enhanced patterns printed in "scroller friendly" RED ink
- Simple and complete instructions
- A classroom in your home at your convenience
- Prompt service – 1st Class Mail
- 30 Day Money-Back Guarantee

LOOK AT WHAT YOU'LL LEARN:
- How to eliminate tracing
- Cutting straight lines, curves, circles
- What blades to use
- Wood/plywood – what works best
- How to eliminate wood burning
- Where to drill starter holes and why
- Stack and bevel cutting techniques
- Finishing tips and techniques
- Marketing your crafts
- And MUCH, MUCH MORE!

SPECIAL HOLIDAY OFFER!

$9.95 + $3 S&H BEFORE Dec. 15, 1995
$14.95 + $3 S&H AFTER Dec. 15, 1995
WA residents add 7.7% sales tax.

GREAT GIFT IDEA

THE BERRY BASKET
1-800-206-9009
P.O. BOX 925-W9, Centralia, WA 98531
VISA, MC, CK, MO

Circle No. 323

Heavy Glass Table Tops

FACTORY DIRECT DISCOUNT PRICING

- Table Tops
- Shelves
- Doors
- Display Cases
- Entertainment Centers
- Tempered Glass

TABLE TOPS BY PHONE
SATISFACTION GUARANTEED!

WGB GLASS ■ SHAPES ■ THICKNESSES ■ EDGE DESIGNS

FOR FREE IDEA CATALOG AND PRICE LIST SEND POST CARD TO:
WGB GLASS 19785 W. 12 MILE RD., STE. 357 SOUTHFIELD, MI 48076
TO PLACE ORDERS: CALL 1-800-288-6854

Circle No. 2079

Woodworker's Marketplace is a section of advertisers offering products by mail. Please contact the advertisers directly or use the number below each ad to request information through the Woodworker's Resource section.

BRANDING IRON

For hard and soft wood

$29.00

Plus $3.00 for shipping and handling

CA residents add correct sales tax

SATISFACTION GUARANTEED or your money back

- Shipped in one week
- Solid brass head — raised letters
- 1st Line: HAND CRAFTED BY — as above
- 2nd Line: Your choice — 20 characters/spaces max.
- Electric iron available for $49.00 + $3.00

ORDER TOLL FREE . . .

1-800-826-7606

Order by mail from: NOVA TOOL CO.
P.O. Box 2791 Dept. BH
Dublin, CA 94568

VISA MasterCard DISCOVER

Circle No. 160

PREFERRED BY THE WORLD'S FOREMOST TOYMAKER!

Tired of the imports? Do you demand THE BEST? EAGLE AMERICA has the World's Largest Selection of top quality American Made router bits, PLUS 100's of new and unique woodworking accessories. Call now for a FREE 1 year Catalog Subscription:

FREE!

CALL 800-872-2511

Circle No. 1320

RIP SAW

The Portable Sawmill.

The "affordable portable" one man band sawmill. Weighs only 45 lbs. Cuts 20" diameter logs into lumber. Minimum 1/8" to maximum 9" thickness. 14"W x 9"H throat capacity. Write or call for free brochure. Videos also available.

Better Built CORPORATION

(508) 657-5636

845 Woburn St., Suite 3, Dept. W12, Wilmington, MA 01887

MasterCard VISA DISCOVER

WOOD TOY

- ★ Patterns
- ★ Parts
- ★ Wheels
- ★ Many New Patterns to Choose from.
- ★ Executive toys

SEND $1.00 FOR NEW CATALOG

toys and joys

Box 628 w Lynden, Wash. 98264

Circle No. 465

BEST CARVING SUPPLIES !

1000s of quality hand & power carving tools, books, kits, plus more. Fast friendly service, lowest price & satisfaction guaranteed. Join 1000's of happy customers, send $2 for our 76 pg. color catalog.

Wood Carvers Supply, Inc.

SERVING CARVERS SINCE 1955

P.O. Box 7500-G, Englewood, FL 34295-7500

Circle No. 2190

CHOICE OF PROS

NOW AVAILABLE AT 40% LESS!

INTRODUCING THE NEW WAGNER L609 MOISTURE METER...

- Pin-Free Narrow Sensor Deep Penetrating
- Features Wagner's Proven EMF Technology
- Accuracy Verified by Independent Studies

Our Lowest Price Was: $225

Now: *$129*

L 4.5" x W 2.75" x H 1.0"

WAGNER ELECTRONICS

"The Choice of the Pros"

1-800-944-7078

326 Pine Grove Road
Rogue River, OR 97537
(503) 582-0541 Fax (503) 582-4138

© 1995 WEPI

Circle No. 1285

MAKE IT MOBILE

WITH HTC MOBILE MACHINE BASES

For a FREE Full-Color Catalog of HTC's Complete Product Line Call: 1-800-624-2027

AMERICAN MADE PRODUCTS htc

Circle No. 1245

Quality
MECHANISMS
For Making
WOODEN BARREL

- ✍ Pens
- ✍ Pencils
- ✍ Roller Balls
- ✍ Fountain Pens

plus other related items.

Wholesale/Retail

Call or Write:

Berea Hardwoods Co.

6367 Eastland Rd. Brookpark, Ohio 44142
216-234-7949 *Master Card/Visa*

Circle No. 510, 1900

Woodworker's Marketplace

CORIAN®
THE NEXT GENERATION OF CRAFTSMANSHIP
FOR THE FIRST TIME EVER
You Can Own a 16 Piece CORIAN® Collector Sample Kit. ***PLUS*** ***Gain Access to Larger Stock For All Your Workshop Projects***
The Sample Kit comes complete with 16 of the most luxurious granite and solid colors available.
16 piece kit $29.95
$5.95 for S&H
Add 5.5% Sales tax in Nebraska
ORDER NOW... Get a FREE fabrication guide direct from a certified CORIAN® fabricator!
VISA 1-800-721-7501 MasterCard
or mail your order to: Solid Surface Sales, 224 N. Main, Suite 5, Fremont, NE 68025
YOUR SOLID SURFACE SUPPLY HOUSE FOR WOODWORKERS
Circle No. 443

HEIRLOOM TOYS

• Original designs by professional toy maker featured in Wood magazine
• Collectors' and children's toys
• Plans and Kits
• Catalog $2 or free with offer
• Special Offer: Send $18.95 for Train Engine, Coal Car and Track Plans
Baldwin Toy Co., Inc.
P.O. Box 37014 Omaha, NE 68137-0014
Dept. WD12
Circle No. 320

Supplement Your Income From Your Home With A Computer!

Begin part-time and still retain the security of your present position. We offer 20 services you can perform for your community from your home. No experience necessary—easy to learn. We provide training and computer. For FREE explanation cassette and literature call:
1-800-343-8014, ext. 184
Computer Business Services, Inc.

One Stop Wood Shop
Where the finest cabinet makers select & blend domestic & exotic hardwood in plywood, veneer & lumber.
• 30 species
• Custom Cuttting
• Plywood & Veneer made to order
• Competitive Pricing
• We bundle & ship to U.S. & Canada
Call (617) 666-1340 today for catalog and quote.
Boulter Plywood Corp.
24-WD Broadway, Somerville, MA 02145
Circle No. 512

Your Handcrafted Clocks Make Treasured Gifts.
Giving your handcrafted clocks as gifts will make you a winner in the hearts of friends and loved ones. And now, your handcrafted clock could also win you a trip for two to Germany. See details about our Create-a-Clock contest in the 1995 Fall catalog.

Call for your **FREE** catalog today.
KLOCKIT®
1-800-556-2548
Dept. WD 125
Circle No. 2335

For All Your Woodcarving & Sign Carving Needs
Terrco provides a full line of machine carving and sign carving equipment. Beginning models are the T-110 single spindle bench carver and our CM614 single spindle sign carver.
Intermediate models include the K-Star, a two-spindle heavy duty bench model, and the Northstar, a heavy duty floor model available in one to eight spindles.
Our advanced model is our Master Carver series, which is an extremely heavy duty floor model with from eight to forty spindles.
Write or call for more information.
Terrco, Inc.
222 1st Ave. NW
Watertown, SD 57201
USA
(605) 882-3888
Fax (605) 882-0778

Model T-110 Dupli-Carver

Model CM614 Sign Carver

Multi-Spindle Carving Machine
Circle No. 2150

WINTER LIQUIDATION!!!
FINANCING AVAILABLE!
LOW MONTHLY PAYMENTS!

SAVE UP TO 45%
Buy factory Direct: 16 X 24 • 20 X 26
Build it yourself !!! 25 X 38 • 40 X 72
The Perfect Building For All Your Needs !!!
CALL TODAY **800-888-4606**
STEELMASTER.
Circle No. 2030

Woodworker's Marketplace is a section of advertisers offering products by mail. Please contact the advertisers directly or use the number below each ad to request information through the Woodworker's Resource section.

BROKEN ARROW DESIGNS

PATTERNS FOR YOUR SCROLLSAW
NEW AND EXCITING DESIGNS

- 1920's Cars
- 1930's Cars
- Motorcycles
- Leaves
- Woodland
- Ocean
- Farm
- Zoo

SOLD IN SETS OF SIX

Only $7.95 PER SET
PLUS $1.00 S & H

CHECK OR M.O. TO-
BROKEN ARROW DESIGN
PO BOX 591
DURHAM, CT 06422

Circle No. 324

Quality Kiln Drying

It's Easy and Affordable with a Nyle DH Kiln!

Call today for FREE FACTS on our L-Series dehumidification kilns.

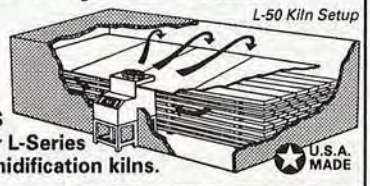

L-50 Kiln Setup

U.S.A. MADE

FINANCING AVAILABLE

- Made for small operations
- Compact and easy to operate
- Unbeatable power and quality

nyle 800-777-NYLE (207) 989-4335

P.O.Box 1107, Bangor, ME 04402-1107 USA

Circle No. 1260

Space Station & Classic Barn Plans

Unique Gifts - 90's Alternative to Doll Houses! Hours of Imaginative Fun for Both Boys and Girls

Plans include details for Interior Levels, Landing Pads, Docking Bays, Satellite Dishes, Optional Stand, Weapons, Shuttle and Aliens. Approx. 2' x 2'.

Barn has Removable Front Wall, Spacious Interior, Loft and Trusses, Opening Doors and Windows. Height 22".

Barn $9.95; Station $11.95 plus $2 per plan S/H.

Paradox Creations
1-800-476-5247
Suite 385W, 4222 I-75, Sault Saint Marie, Michigan 49783

Circle No. 420

SQUARE DRIVE SCREWS

Simply the Best!

- Square Drive Beats Driver Slippage
- Hardened Steel for Extra Strength
- Deep Thread for Super Grip
- Also Stainless and Brass

Send $3 for Samples and Catalog

McFEELY'S SQUARE DRIVE SCREWS P.O. Box 11169 Lynchburg • Va • 24506
1-800-443-7937 or FAX (804) 847-7136

Circle No. 2450

"The SJÖBERGS 2200 BS will faithfully serve several generations of woodworkers" Wood Magazine August 1995

Weight: 180lbs
Length: 8'3"
Width: 2'4"
Height: 2'10"

SJÖBERGS OF SWEDEN

TOP QUALITY MADE IN SWEDEN

- Europe's biggest manufacturer of traditional cabinet makers workbenches
- Full range to suit all requirements
- Contact Sjöberg USA for full color catalog and list of dealers

Tel: 1-800-586-7635

Circle No. 440

Pen Turning Materials

●Wide Selection ●Tropical woods; S. American, African and Tasmanian ●Stabilized and dyed woods; spalted, burls, and figured hardwoods ●Largest Dymondwood pen stock dealer in the U.S. ●Dymondwood pen blanks as low as .55 each ●Pen Mechanisms/Kits ●HUT Finishes

●Sherline Miniture Machinist Lathe: excellent for pen turner who needs higher production than on conventional lathes ●Wholesale Diagonal Cut Dymondwood, Ph 1-713-261-5512 ●Accessories ●High Quality/Service

HUT Products For Wood
15361 Hopper Road - Sturgeon MO 65284
For orders or ***free*** *wood turning/pen supply catalog*
CALL 1-800-547-5461

Circle No. 230

Van Dyke's

Presents a Catalog

with supplies for upholstery, antique restoration, wood working, caning, brass hardware, carvings and many related trades!

VAN DYKE SUPPLY COMPANY · SUPPLIES FOR CREATIVE ARTS AND TRADES ·

40 Years in Creative Arts & Trades

Many Hard-To-Find Items!

SEND $1.00 FOR CATALOG TO:
VAN DYKE'S RESTORERS
Dept. D55, P.O. Box 278, Woonsocket, SD 57385

Circle No. 2077

Build the Great
Telephones of Yesteryear

Nottinghill Woodworks proudly offers our collection of antique wall and desk phones in kit form.

- Available with or without precut wood parts.
- Perfect for beginners or skilled woodworkers alike.
- All kits include electronics and outer hardware.
- Each kit is a fully functional telephone.
- The perfect weekend project that will grace your home or office for years to come.

Catalog $2.00. To order by credit card, call 1-800-819-WOOD or send to: Nottinghill Woodworks, Dept. 350 6663 SW Beaverton-Hillsdale Hwy, #289 Portland, OR 97225-1403

NOTTINGHILL WOODWORKS

"Cuts project time in half, eliminates the need for an expensive arsenal of clamps and is simple to use. **The Kreg Jig** *outperformed its competition by a wide margin. It's worth the investment."*
Wood Magazine, Jan. 1995

The Kreg Jig

DISCOVER THE POCKET HOLE ADVANTAGE

KREG TOOL COMPANY

THE POCKET HOLE PROFESSIONAL

Discover the pocket hole secret for yourself. 30 day trial. Order today! Free catalog!

800-447-8638

Circle No. 877

Woodworker's Marketplace

HARDWOODS
EXOTIC & DOMESTIC
OVER 100 SPECIES
LUMBER • VENEERS • TURNING STOCK
WOODWORKERS SAMPLER
Discover the perfect wood for your projects
30 GORGEOUS WOODS
Standard collectors size 1/2" x 3" x 6" sanded smooth, labeled with the common and botanical name. Ideal for displays, use to test workability or finish, or just experience and feel these beautiful products of nature.
$59.00 postage paid in Cont US
BOOK OF FINE HARDWOODS *included*
Provides geographic source, description, uses and availability for over 200 woods. Over 70 woods shown in full color. Charts compare physical properties. 60pgs.
A great reference tool!
1-800-423-2450
WOODWORKERS *Source*
5402 S. 40th St. • Phoenix, AZ 85040 • 602-437-4415
SATISFACTION GUARANTEED

Circle No. 598, 2090

She loves me. . .
and the beautiful doll closet I made for her. Built to hold dress and accessories for Barbie-sized dolls, with drawers, shelf and hanger bar. Precision-cut parts, pre-drilled for exact fit. You assemble and finish. $53.95 (5.95 s/h). VA residents add 4.5% sales tax. *12½"w x 23½"h x 11" deep (14 lbs)*
Proudly made in the USA by
To order call
1-800 MATCH 99
(1-800-628-2499)
the match company
P.O. Box 220702, Chantilly, VA 22022
Visa, MasterCard, check or money order.
Satisfaction guaranteed or your money back.

Circle No. 1065

Supergrit® SANDPAPER
HOOK & LOOP

4½"	8 Hole	$10.00/50
5"	5 or 8 Hole	$12.50/50
6"	6 Hole	$17.50/50
5"	Solid "E"	$15.00/50
6"	Solid "E"	$18.00/50
12"	Solid "E"	$12.00/6

BLUE ZIRCONIA
Best in the World
DISCS: 5" P.S.A. 35¢ · 6" P.S.A. 40¢
BELTS: 1" x 42" $1.75 · 6" x 48" $5.50
35¢ Each
3⅝" · 3⅝"
RED HILL CORP.
P.O. BOX 4234
GETTYSBURG, PA 17325
FREE 28 PAGE CATALOG
& Incredible close-out sheets.
800-822-4003

Circle No. 1267

FREE! OUR NEW 1995-96 WOODWORKER'S CATALOG
Over 6000 products to **BUILD, REPAIR, RESTORE, REFINISH** anything made of wood!
It's the catalog woodworkers rely on–120 pages jam-packed with fine woods, veneers, tools, finishing supplies, and much more–all top quality, all reasonably priced, all with our 60–day no–questions–asked guarantee.
CONSTANTINE
Serving Woodworkers Since 1812
2050 Eastchester Rd., Dpt. 35512, Bronx NY 10461
Call TOLL FREE 1-800-223-8087

Circle No. 20, 820

AMAZING
SCROLLSAW FRETWORK PATTERNS
Easy to advanced designs
Clocks
Photo frames
Jewelry boxes
Candle holders
Furniture
Clock movements
Plywood
Silhouettes on
Christmas
religion
farming
western
nature
transportation
& more.
Books
Saw blades
Hardwoods
FREE catalog
1-800-470-9090
WILDWOOD DESIGNS
P.O. Box 676-WD
Richland Center
WI 53581

Circle No. 475

A BIRD HOUSE plan to add more charm to your garden along with your Country Chateau BIRD FEEDER. Designed according to the National Audubon Society's recommendations, with four separate nesting boxes, will attract birds that use an enclosed nest. A handsome addition to any garden. Build as a Christmas gift for family etc. It would be a money maker at Craft Shows.
BIRD HOUSE
PLANS $21.95 including S&H. Send check or money order or call
800-421-8221, Visa, Mastercard accepted
GOOSE POND MILL
P.O. Box 578, Great Falls, VA 22066-0578

Circle No. 365

Buckboard Bench Kit
(Real Springs)
Kit Includes:
Authentically designed steel springs that give a little, steel arms and backrails, complete hardware and full-size plans with detailed instructions. 42"Lx22"W, 18"H to Seat, 30"H to Back
Price: $49.00 (Quantity discounts available)
Pre-cut & drilled oak: $70.00 Additional
The Roudebush Company
PO Box 348A, Star City, IN 46985
800-847-4947
Visa, MC accepted. Price includes shipping UPS

Circle No. 1085

ONE-MAN SAWMILL
Turns Your Timber Into **CASH!**
30-Day Free Trial!
Call NOW for FREE FACTS!
1-800-942-4406 ext. SW30
TIMBERKING, INC. Dept. SW30
1431 N. TOPPING, KANSAS CITY, MO 64120

Hand-Tooled Carving Look
PROFESSIONAL CARVERS' CHOICE
AUTO MACH
Rugged, lightweight aluminum housing. Pressure-activated head controls cut depth, speeds to 10,000 VPM. Makes carving easy! Convertible to rotary use. Heavy-duty 80W motor operates on household current. Includes instruction booklet and 5 steel blades. Specialized blades available.
Don't be fooled by cheap imitation detail carvers!
Prices start at $178.00
Visa and Mastercard accepted.
Sugino Corp.
(708) 397-9401
1700 Penny Lane
Schaumburg, IL 60173

Circle No. 2170

ADVERTISEMENT

The Best Projects From *WOOD*® magazine Compiled Into This Handy Set

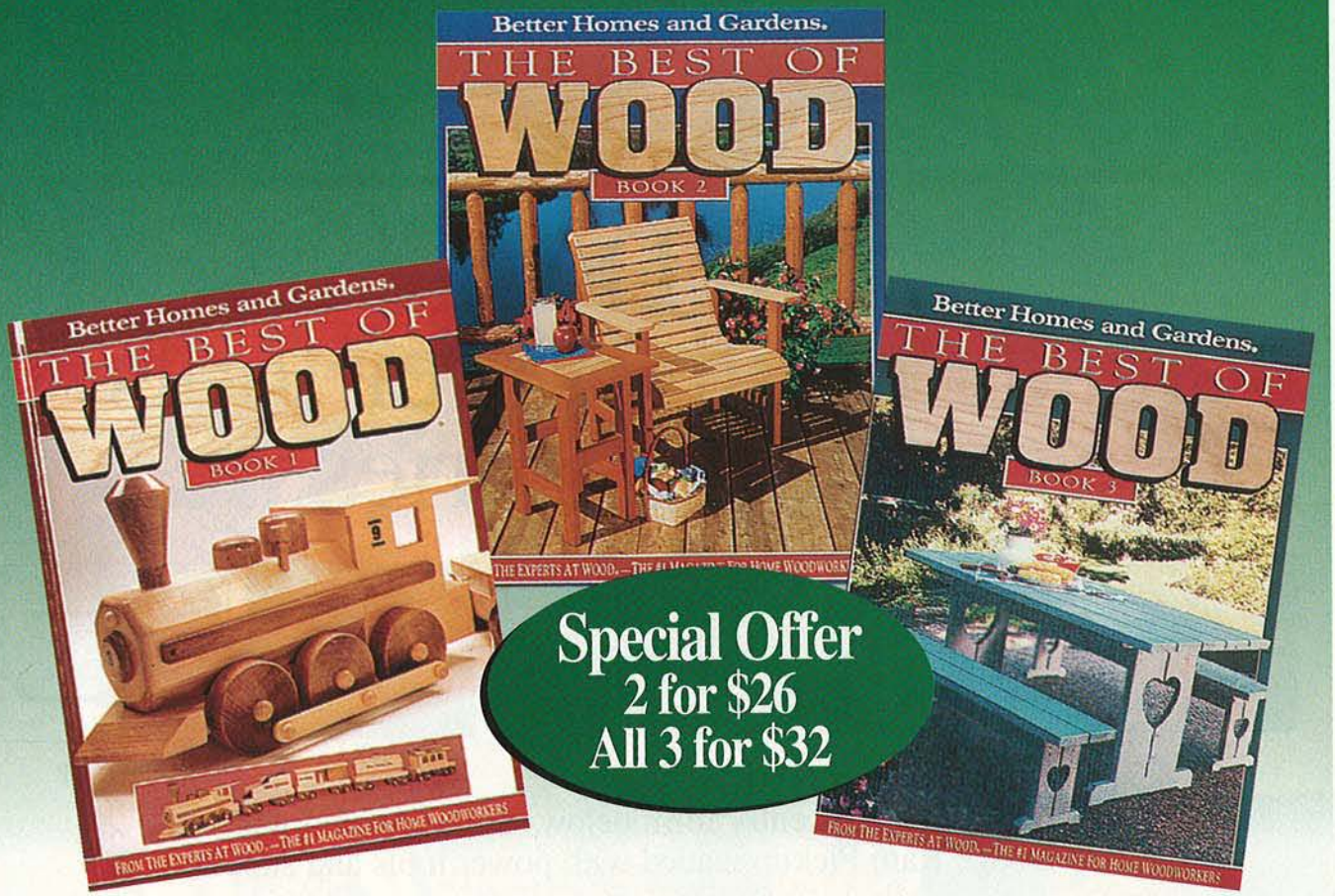

Special Offer
2 for $26
All 3 for $32

Best of *WOOD* Book 1
More than 35 of the most popular projects from *WOOD*, with photographs, diagrams, and exploded diagrams. Softcover -160 pages. $14.95

Best of *WOOD* Book 2
Features 40 fantastic projects from *WOOD*, designed with a mix of styles for all skill levels. Softcover -160 pages. $14.95

Best of *WOOD* Book 3
More than 430 photos, illustrations, and exploded diagrams for the 35 great projects featured. Softcover -160 pages. $14.95

MAIL TO: *WOOD* Books, P.O. Box 9255, Dept. WD-39, Des Moines, IA 50306. Each book is $14.95 plus $2 each for shipping and handling. Allow 4-6 weeks for delivery. State and local taxes, if applicable, are included. Please add additional $2 for each book for Canadian or other foreign orders. 100% money-back guarantee if not completely satisfied.

Call 800/572-9350 for VISA or MasterCard orders

Win a '96 Dodge Ram loaded with power tools and accessories.

DeWalt

Ryobi

Delta

Franklin

Quick-Grip

Simply fill out the entry form below, and you could win a 1996 Dodge Ram Pickup loaded with power tools and supplies.

RULES

1. NO PURCHASE NECESSARY.
2. To enter, fill out the Official Entry Form. You may also enter by sending your name, address and phone number on a postcard to: Dodge Sweepstakes, WOOD magazine GA-204, 1912 Grand Ave., Des Moines, IA 50309-3379. You may enter as many times as you wish.
3. Entries must be received by April 1, 1996. No responsibility is assumed for lost, late, illegible, damaged, postage due, or misdirected entries.
4. Sweepstakes open to residents of the U.S.A. who are 18 years of age or older, except employees (and members of their families) of Home Depot, Meredith Corporation, Chrysler Corporation and their dealers, agents, affiliates, and subsidiaries.
5. The winner will be selected on or about April 15, 1996. Winner will be notified by mail and tool prizes and truck delivered on or about May 15, 1996.
6. Selection of winner by a random drawing from all entries received will be under the supervision of Meredith Corporation whose decisions are final. One winner will receive all prizes.
7. Odds of winning depend upon number of entries received.
8. Grand Prize: Delta–your choice of $500 in Delta tools, DeWalt–your choice of $500 in DeWalt tools, Ryobi–your choice of $500 in Ryobi tools, Quick-Grip–your choice of $500 in Quick-Grip clamps, Franklin–one case of Titebond Glue and one case of Titebond II Glue, total retail value $75, and a 1996 Dodge Ram 1500 SLT, approximate retail value $20,000 (truck will have been registered to *WOOD* magazine and will have limited mileage from store-to-store transport). Prizes are not exchangeable or transferable.
9. Entry constitutes permission to use winner's entry, name, hometown, likeness, and photograph for editorial, public relations, promotional, and advertising purposes on behalf of Meredith Corporation, unless prohibited by law. Winner will be required to sign an Affidavit of Eligibility and Release of Liability within ten (10) days of notification.
10. Subject to all federal, state, and local laws and regulations. Void where prohibited. Applicable taxes (other than sales tax on truck), title, and registration fees are the sole responsibility of the winner.
11. For prize winner's name and address (available after April 30, 1996) send a separate, self-addressed, stamped envelope to: Dodge Truck Winner, *WOOD* magazine GA-204, 1912 Grand Ave., Des Moines, IA 50309-3379.

OFFICIAL ENTRY FORM

Win a Dodge Ram Pickup loaded with Power Tools and Supplies.

Name _____

Address _____

City _____ State _____ ZIP _____

Phone _____

Please answer the following questions:

1. Do you currently own a truck? YES____ NO____
   (If Yes) What is the make and model of the newest truck you own?
   Make _____ Model _____
2. Do you plan to lease/buy a new truck within...
   less than 6 months____ 6-12 months____ 1-2 years____
   Don't plan to lease/buy____
3. Would you like to receive more information on Dodge Trucks?
   YES____ NO____

Entry Deadline April 1, 1996 Send to: Dodge Truck Contest *WOOD* magazine GA-204, 1912 Grand Ave., Des Moines IA 50309-3379

The New Dodge DEWALT DELTA WOODWORKING MACHINERY Better Homes and Gardens WOOD RYOBI QUICK-GRIP Titebond Wood Glues Franklin International

Announcing The Next Generation In Wood Finishing.

DEFT

Millennium Aerosols
Meet All
San Francisco Bay Area
VOC Regulations.

Dries In 1 Hour

- VERY LOW VOC
- CRYSTAL CLEAR FINISH
- WATER CLEAN UP
- ECO-FORMULA
- SUPER HARD FLOOR FINISH

Formulated With Your Time And Our Planet In Mind.

Millennium™ is the first water base polyurethane to incorporate MDL™ (Multi-Dimensional Linking). MDL gives Millennium it's extraordinary toughness.

Deft, Inc. Irvine, California (800) 544-DEFT, Alliance, Ohio (800) 458-DEFT, Toronto, Canada (416) 798-DEFT

ADVERTISEMENT

Woodworker's Resource

Print this article

You can get useful ideas and product information by mail. Use the coupon in this section to order your choice of literature listed below. Each company mails the catalogs or information directly to you.

POWER TOOLS

ABBEY TOOLS—The much-requested, long-awaited, you'd-better-hold on-to-this-one-because-who-knows-when-we'll-print-another tool catalog, is here. Packed with 1000's of top brand name power tools and accessories—all at the lowest possible prices. Whether you are a beginning woodworker or an old pro you'll find just the tool you need. Remember—if you can plug it in, we've got it! **ABBEY TOOLS.** $1.00. *Circle No. 2.*

SCROLL SAW, CRAFT & WOODWORKING CATALOG—Specialty products from the exclusive distributors of HEGNER, the critically acclaimed scroll saws. Complete information on scroll saws and accessories, including blades and lettering guides. Also ZYLISS Portable Vise, HEGNER Lathes, PLANO Vertical Glue Press, and more. Toll-free customer service hotline included! **AMI, LTD.** Free. *Circle No. 3.*

TRANSPOWER, CP TOOLS INC.—A fine line of quality woodworking machinery, saws, shapers, planers and more. Send for free catalog. **CP TOOLS INC.** Free. *Circle No. 15.*

TOOLS AND ACCESSORIES—120 page color catalog features Record lathes, Porter-Cable routers, sanders, saws, drill-drivers, pocket hole cutters, grinders, biscuit joiners, Vega lathe duplicators and saw fences, Vacu-Presses and more. Best quality, fairly priced, every tool backed by our 183 years' experience and 60-day money-back guarantee. 2 year subscription. **CONSTANTINE'S.** $1.00. *Circle No. 20.*

INCA MACHINERY INFORMATION—Complete information on the famous line of Inca woodworking machines. Designed for precision work by the small to medium sized cabinet shop. Used by thousands of hobbyists and professionals. Table saws, bandsaws, joiner/planers, dust collector, radial arm saw. **GARRETT WADE CO.** Free. *Circle No. 44.*

HARBOR FREIGHT TOOLS CATALOG—The finest professional quality tools and equipment at the lowest prices...GUARANTEED! Our NEW Woodworking catalog has been expanded to contain hundreds of additional brand name woodworking tools & supplies. See why millions of woodworking professionals and Do-It-Yourselfers have shopped at Harbor Freight Tools for over 27 years. **HARBOR FREIGHT TOOLS.** Free. *Circle No. 46.*

INTERNATIONAL TOOL CORPORATION CATALOG—features the finest tools & accessories at the absolute lowest prices anywhere! Whether you're a home woodworker or an industrial user, you will find an incredible selection featuring Porter Cable, Bosch, Skil, Freud, Delta, Powermatic, Milwaukee, Makita, Hitachi, and many, many more. We offer same day shipping, the most knowledgable sales staff and free shipping on most UPS orders in the contiguous U.S. **INTERNATIONAL TOOL CORP.** $2.00. *Circle No. 49.*

GET TO THE FINISH LINE FASTER—with a Performax drum sander. Don't spend hours with a hand-held belt sander. Sand ultra-wide stock ultra-smooth in just minutes. Models start at $300 to $3495. Select the model that fits your budget and your needs. New metal abrasive fasteners keep sandpaper tight without re-wrapping. **PERFORMAX PRODUCTS.** $1.00. *Circle No. 78.*

RBINDUSTRIES, WOODWORKING TOOLS & ACCESSORIES—100% Made in USA. The NEW 1994–1995 RBI catalog features the all new HAWK Precision *ULTRA* Scroll Saws, "4-in-1" and "3-in-1" Universal Woodplaner Systems, and 26" Variable Speed Drum Sander, 38" Drum Sander, the all NEW Panelmaster II Raised Panel Door Machine, Router Tables, Books, Accessories, Patterns, and Much More. When you buy from rbindustries, you're saving big money by buying factory-direct from one of America's premier woodworking tool manufacturers. We stand behind every piece of equipment we manufacturer with our exclusive 30-Day, Money Back Guarantee and 5-Year Warranty. Send today for your FREE catalog. **RBINDUSTRIES, INC.** Free. *Circle No. 84.*

MINI POWER TOOL CATALOG—Designed for easy reference, Ryobi's "shirt pocket" Power Tool Catalog includes our complete line of power tools, categorized by type: bench top, cordless, hand-held and stationary models. It features individual tool photographs with specifications and clear descriptions that offer specific uses and benefits. Accessories are also listed. Send for catalog. **RYOBI.** Free. *Circle No. 86.*

THE ADVANTAGE—That's what you'll have over other woodworkers when you are using SECO MACHINERY. With choices of straight-line rip saws, wide belt sanders, dust collectors, power feeders, and lots...lots...more. Write today for a catalog of this woodworkers choice. Se habla espanol. Dealer inquiries welcome. Send for catalog. **SECO INVESTMENT CO.** Free. *Circle No. 91.*

TOOLS ON SALE™—A division of Seven Corners Ace Hardware, Inc. offers a catalog of over 400 pages of the most popular brands of power tools available anywhere, all at discounted prices. Included are saws, planers, sanders, routers, drills and more from manufacturers such as Milwaukee, Makita, Porter Cable, Black & Decker, Dewalt, Freud, Bosch, Delta, and many more. Now introducing a full range of Werner brand ladders. Tools on Sale™ division of **SEVEN CORNERS ACE HARDWARE, INC.** $1.00. *Circle No. 92.*

WILKE MACHINERY CATALOG—80 pages of quality wood and metalworking machinery, tools, accessories, books and videos. Bridgewood planers, bandsaws, lathes, jointers, wide belt sanders and more. General, Porter-Cable, DeWalt and other famous brands. **WILKE MACHINERY CO.** $2.00. *Circle No. 96.*

OWN A MACHINE SHOP—Do your own machining and shop work with a Smithy 3-in-1 Lathe-Mill-Drill. Save time and money with versatile, easy to use Smithy machines. 64-page catalog features over 500 machine tools and accessories. **SMITHY.** Free. *Circle No. 99.*

HAND TOOLS

PERSONAL BRANDING IRONS—Brochure describes branding irons that enable you to put your name on your work quickly and easily. Made especially for branding wood, they are available with 1, 2, 3 or 4 lines of copy. Changeable date also available. **NOVA TOOL CO.** $1.00. *Circle No. 160.*

STAINS/FINISHES

PERFECT PEN POLISH—NEW Developed for pens but great for any small lathe turned object. Pen Turning Manual, everything you need to know from wood selection to marketing. A complete line of pen making supplies—many styles of mechanisms, unusual pen turning materials such as dyed stabilized burls and spalted woods. Send for catalog of wood turning and pen supplies. **HUT PRODUCTS FOR WOOD.** $1.00. *Circle No. 230.*

PLANS

WOODWORKERS' PLANS AND SUPPLIES—Wood projects are simplified with the high quality plans, specialty hardware and other supplies offered by Armor Products. Over 100 plans are available for making toys, desks, clocks, pool tables, lamps, chests, and other furniture. Movements, dials, moldings, ornaments, dollhouse kits, door harp supplies and tuning pins are also available. **ARMOR PRODUCTS.** $1.00. *Circle No. 315.*

HEIRLOOM WOOD TOY PLANS—You too can build The General train as featured in WOOD, Sept. 1994! Send for our catalog of plans, kits and finished toys. Unique plans for every skill level—arks, cars, trucks, trains and much more. Original designs, by professional toy maker, are based on an exclusive puzzle-concept. **BALDWIN TOY COMPANY.** $2.00. *Circle No. 320.*

FREE SCROLL SAW PATTERN CATALOG—A beautiful full-color catalog showcasing our full line of woodworking patterns and accessories: shelves, mirrors, videos, books, baskets, blades, clocks, finials, drill bits, doll furniture, footswitches, and much, much more. Too much to list here—you just gotta send for one today! **THE BERRY BASKET.** Free. *Circle No. 323.*

SCROLLSAW PATTERNS—In sets of six or more. 1920's cars, 1930's cars, motorcycles, woodland, ocean, farm, zoo, Christmas, dogs, or beasts. Some intarsia, others very detailed or multi-piece. These patterns grab attention. **BROKEN ARROW DESIGN.** $1.00. *Circle No. 324.*

THE "CADILLAC OF CATALOGS"—You've never seen anything like this—promise! Our catalog has over 2,000 plans and patterns from over 50 companies. The selection seems endless and the quality guaranteed. We are proud to offer so many unusual & unique plans. Many of these plans have been at our customer's request. We also have a new line of "Nothing but..." catalogs featuring ten different related subjects. The first, and our favorite, to be introduced will be "Nothing But Christmas" (see next listing for details). Catalog. **CREATIVECRAFT PLANS.** $4.00. *Circle No. 330.*

CREATIVECRAFT PLANS—Offers you its newest catalog in the "Nothing But..." series! What is the "Nothing But..." series you ask. Every catalog features *nothing but* a particular subject, e.g., *nothing but* Christmas, *nothing but* bird houses and feeders, *nothing but* lawn & garden, etc., etc., etc. The first and ready for the Christmas season is "Nothing But Christmas". Don't miss the boat, order your catalog of Christmas plans & patterns today. **CREATIVECRAFT PLANS.** $2.00. *Circle No. 331.*

FULL-SIZE FURNITURE PLANS CATALOG—Illustrates and describes over 200 plans for making furniture of quality found in museums and fine furniture stores. Plans include rolltop desk, cradles, dining tables, chairs, buffets, chests, gun cabinets, poker table, children's furniture, rocking horse, spinning wheels, and more. Bill of materials exploded drawings assist the woodworker. **FURNITURE DESIGNS, INC.** $3.00. *Circle No. 345.*

NEW EXQUISITE BIRD HOUSE—Now available, as well as our ever popular bird feeder and stand. Two creative designs to add a touch of charm and whimsey to your garden. Build for Christmas gifts or sell for profit at craft shows. Send for information. **GOOSE POND MILL.** $2.00. *Circle No. 365.*

PROJECT PLANS—Full-size patterns for over 750 easy-to-build woodworking projects. Nation's leading source for scroll saw patterns, cow projects, toy plans, yard ornaments, wood furniture, etc. Over 3000 hard-to-find specialty items. Send for big new 96-page full-color catalog. **MEISEL HARDWARE SPECIALTIES.** $2.00. *Circle No. 401.*

PLANS FOR UNIQUE CHRISTMAS GIFTS—90's alternative to doll houses. Great for either boys or girls. Space station with many accessories for customizing, plus aliens and shuttles. Spacious, sturdy barn plus animals, tractors, and wagons. Ark toy box. New plans for coffee and end tables simply styled to compliment many decors; wall and ceiling light fixtures, table lamps. Brochure with pictures and full descriptions. **PARADOX CREATIONS.** $1.00. *Circle No. 420.*

SJÖBERGS WORKBENCH CATALOG—Full-color catalog which illustrates the full range of cabinet makers' workbenches from Europe's largest manufacturer. Sjöbergs workbenches are made in Sweden and have many unique features including the holdfast facility. There is a wide range of models to suit all requirements for home or industry. **SJÖBERGS.** Free. *Circle No. 440.*

CORIAN® PROJECT GUIDE—5 separate projects you can create in your own workshop. Comes complete with a step-by-step guide and directions on where to purchase Corian® for these projects and others. **SOLID SURFACE SALES.** $3.00. *Circle No. 443.*

TO ORDER THESE BOOKLETS, USE COUPON ON PAGE 96

WOODWORKERS—Send for our color catalog with many exciting new plans available. Six styles of bed plans such as 2 Car Beds, Gingerbread Bed, Futon Sofa, Lounge and Bunk/Sofa Combo. New designs in lawn furniture are Adirondack Tete-A-Tete, Patio Rocking Glider, Small Garden Wishing Well, Bird Feeders and Bird Houses. We have added a Doll Cradle, Baby Cradle, Toddler Caster Horse and a variety of craft items. Full size templates, material list, instructions and cutting diagram. **SPECIALTY FURNITURE DESIGNS.** $3.00. *Circle No. 445.*

WOOD TOY PATTERNS—Patterns for all ages including children's patterns and executive toys. New catalog has many new patterns to choose from including parts and wheels. Send for new catalog today. **TOYS AND JOYS.** $1.00. *Circle No. 465.*

SCROLLSAW FRETWORK PATTERNS—& supplies catalog. From simple cutouts to 50" tall clocks. Over 300 patterns for the scrollsaw enthusiast. Also clock movements, tools, books, plywood, hardwood, sawblades. Great projects for the hobbyist or for profit. Catalog. **WILDWOOD DESIGNS, INC.** Free. *Circle No. 475.*

LUMBER

QUALITY EXOTIC LUMBER/TURNING WOODS—We offer a comprehensive selection of fine quality exotic woods. Also available are mechanisms for making wooden barrel pens/pencils/roller balls/fountain pens. Ebony, Kingwood, Tulipwood, Snakewood, African Blackwood, Cocobolo, Bloodwood, Figured Maple, Spaulted Maple, Padauk, etc. Unique and unusual turning woods and burls are also available. Send for catalog. **BEREA HARDWOODS.** $1.00. *Circle No. 510.*

ONE STOP WOOD SHOP—Domestic and exotic hardwood plywood and lumber, marine plywood, over 30 species in stock—all under one roof. Custom cutting services to your exact specifications with little or no waste at competitive prices! We specialize in bundling and shipping. Send for catalog. **BOULTER PLYWOOD CORP.** Free. *Circle No. 512.*

DUNHAM HARDWOODS—Specializing in red oak and other quality hardwoods. Send for a complete listing of species, prices, thicknesses and grades. All lumber is kiln dried and graded according to NHLA rules. We have twenty-two species of hardwoods and can ship small orders UPS; large orders, common carrier. Quality, price and service are the name of our game. **DUNHAM HARDWOODS.** Free. *Circle No. 530.*

STEVE H. WALL LUMBER CO—Quality hardwoods and woodworking machinery for the craftsman and educational institutions. 16-page catalog lists 17 species of popular hardwoods at wholesale prices. Also dealers for MiniMax, Freud and ProCut woodworking machines. **STEVE H. WALL LUMBER CO.** $1.00. *Circle No. 592.*

EXOTIC IMPORTED AND DOMESTIC HARDWOODS—Select from more than 100 different woods. Lumber, bowl blanks, turning squares and veneer. Samples (½" x 3" x 6") available, fully sanded. Ideal for collectors, craftsmen, furniture and cabinet makers, architects and designers. Custom cutting and thin stock manufactured. Satisfaction Guaranteed. Send for catalog. **WOODWORKERS SOURCE.** $1.00. *Circle No. 598.*

VIDEOS

JOINTECH CABINET MAKER'S SYSTEM VIDEO—Watch Dr. Roger Cliffe and Dave Morgan demonstrate this patented System that can perform every operation in furniture and cabinet making. See how easy it is to make raised panel doors plus techniques in making dovetails, box joints, drawer construction and even an intricate double-inlay joint. All the operations which would normally require the use of a shaper, router and a jointer can now be accomplished with the JOINTECH CabinetMaker's System. **JOINTECH, INC.** $5.00. *Circle No. 610.*

LAGUNA TOOLS VIDEO—Learn why most European workshops are using a central machine center rather than separate machines. 90 min. video presentation of "The Intelligent One Man Shop. The Robland X 31". Send for video. **LAGUNA TOOLS.** $6.00. *Circle No. 615.*

GENERAL WOODWORKING CATALOGS

WOODWORKING SUPPLIES—Blocks, pegs, cups, hearts, hardware, bandsaw blades, abrasives, toy parts, glue, clock parts, miniatures, balls, dowels, spindles, knobs, beads, picture hangers, cup hooks, finials, screw eyes, game pieces, novelty items, and much more. **BENNY'S WOODWORKS.** $1.00. *Circle No. 810.*

WOODWORKER'S CATALOG—Constantine really knows lumber and tools—they've been in the business since before you were born! 120-page catalog of imported and domestic woods, veneers, carvings, moldings, tools, jigs, finishes, hardware and more—all backed by a 60-day money-back guarantee and 183 years' experience! 2 year subscription. **CONSTANTINE'S.** $1.00. *Circle No. 820.*

THE WOODTURNERS CATALOG—48 color pages of the finest woodturning tools, machinery and supplies available. Featuring Henry Taylor, Sorby, Richard Raffan and Dale Nish workshops. Catalog price refunded with order. **CRAFT SUPPLIES USA.** $2.00. *Circle No. 830.*

MASTER TOOLS CATALOG—1994-95 236-page master woodworking tools catalog. Full line of the best hand tools, power tools & accessories, machinery, glues, finishing supplies, workbenches, and much more. Hundreds of books included. All four-color. Lots of technical information. **GARRETT WADE CO.** Free. *Circle No. 855.*

GRIZZLY IMPORTS, INC.—1995 is our 12th year of providing woodworkers with an incredible selection of machines, tools and accessories at prices you can afford. Send for your free 1995 catalog today and celebrate with tremendous savings on all your woodworking needs. **GRIZZLY IMPORTS INC.** Free. *Circle No. 860.*

KREG TOOL CO.—Specializes in pocket hole tools, supplies and how-to videos for pocket hole joinery, including THE KREG JIG. Catalog also includes hinges, drawer slides, Crystalac water-based stains and finishes, KTC high quality router bits and more. **KREG TOOL COMPANY.** 50¢. *Circle No. 877.*

MINI POWER TOOL CATALOG—Designed for easy reference, Ryobi's "shirt pocket" Power Tool Catalog includes our complete line of power tools, categorized by type: bench top, cordless, hand-held and stationary models. It features individual tool photographs with specifications and clear descriptions that offer specific uses and benefits. Accessories are also listed. Send for catalog. **RYOBI.** Free. *Circle No. 925.*

WOODWORKING CATALOG—48-page full-color catalog of top quality woodworking machines and supplies. See the American made tools! Total Shop is bringing production home. Many tools now made in the U.S.A. Dust collectors, table saws, lathes, drills, you name it we have it. Catalog free! **TOTAL SHOP.** Free. *Circle No. 940.*

COMPLIMENTARY TOOL CATALOG—Woodcraft offers over 4,000 of the finest quality woodworking tools, books, supplies, and cabinetry hardware in our complete full color catalog. Craftsmen, cabinetmakers, carvers, woodturners, and hobbyists have depended on Woodcraft since 1928. Backed by Woodcraft's unconditional guarantee. Free technical assistance. **WOODCRAFT SUPPLY CORP.** Free. *Circle No. 955.*

THE WOODWORKERS' STORE CATALOG—New! The Woodworkers' Store 1994/95 catalog with hundreds of new items features 112 full color pages of domestic and exotic hardwoods, veneers, wood parts, specialty hardware, kitchen accessories, finishing supplies, tools, books, and plans... Many exclusive items and hard to find specialties. Orders shipped in 24 to 48 hours. Toll free ordering. Over 40 years in business! Satisfaction guaranteed. Catalog. **THE WOODWORKERS' STORE.** Free. *Circle No. 965.*

KITS

OUR QUEEN ANNE FURNITURE KITS—are ready to assemble and finish. They include dining room chairs, a variety of occasional tables, and a personal desk. All are made in solid cherry, oak, walnut, and mahogany. We also stock individual Queen Anne legs for every project. Complete information in our brochure packet. **ADAMS WOOD PRODUCTS.** Free. *Circle No. 1002.*

INTRODUCING THE LIT'L OLD TOY MAKER—A family-oriented company dedicated to returning quality, and good old fashioned fun to what a toy should be. We offer patterns, complete kits, or fully assembled toys made from poplar and pine. Assemble one your self or let us do it for you. For you pros just the pattern will do. Send for our catalog and have some fun!! **THE LIT'L OLD TOY MAKER.** $2.00. *Circle No. 1060.*

MATCH KITS—Designed for your enjoyment. Everything included up to final finish. Each piece precisely cut and pre-drilled for exact fit. The beginner or experienced woodworker will experience pride in making, using or giving as a gift, a Match Kit. Information. **THE MATCH COMPANY.** $1.00. *Circle No. 1065.*

SHIP MODELING CATALOG—Historic Ship Models—Museum quality replicas you build yourself. Pre-cut wooden parts, metal and brass fittings, cloth sails, plans and instructions. Send for 80 page color catalog. **MODEL EXPO, INC.** $1.00. *Circle No. 1075.*

BUCKBOARD BENCH KIT—Kit includes steel springs that give a little, metal arms and back rails, hardware, and full-size instructions. New matching trestle table kit. **THE ROUDEBUSH CO.** 50¢. *Circle No. 1085.*

PUBLICATIONS

WOODWORKING BOOKS BY MAIL—800+ books for woodworkers, carvers and craftspeople. Quality books on intarsia, furniture, scroll saw, turning, whittling, decoys, drawing and reference. New releases, hard-to-find titles. All Judy Gale Roberts books available. Easy ordering. Includes $2.00 coupon good on first order plus free carving pattern. **FOX CHAPEL PUBLISHING CO.** $2.00. *Circle No. 1123.*

SHOP ACCESSORIES

ECON-ABRASIVES—Offers a complete line of sandpapers and woodworking related accessories. We custom make abrasive belts in any size and in any grit. Catalog. **ECON-ABRASIVES.** Free. *Circle No. 1229.*

EASY DOES IT—with HTC'S power tool accessories. Discover many unique items, designed only with you, the dedicated woodworker, in mind. Make your machinery safer, increase the working area of your shop and accomplish nearly impossible tasks easily, quickly, accurately. Full-line catalog and price list. **HTC PRODUCTS, INC.** Free. *Circle No. 1245.*

WOOD MOISTURE METER—Avoid moisture defects such as cracking, warping, splitting, delamination. The pin-type moisture meter "Mini-Ligno" can read surface or core moisture in any thickness of lumber, from veneer through heavy timbers. A flat surface is not necessarily required, thus the Mini works on rough sawn lumber and curved or round pieces. A most versatile instrument. Many hobbyists and professionals use the Mini-Ligno C or E/C with attachments to monitor lumber during air or kiln drying or use external electrode for depth readings. Catalogue describes complete line of moisture meters. **LIGNOMAT USA, LTD.** Free. *Circle No. 1250.*

ROUTER SPEED CONTROL—Reduces speed electronically without reducing torque. Route at the speed that gives best results with the wood and bit you are using. Speed adjustable from full speed to 0 RPM. Less tear out—stops burning—less wear on bits—easy to use. Send today for information. **MLCS LTD.** Free. *Circle No. 1251.*

LUMBER DRYING—Dry your own lumber using our equipment and your insulated chamber. Dehumidification systems from 300 BF to 45,000 BF. Easy to operate equipment offers high quality kiln-dried lumber for pennies per foot. These long-lasting made-in-the-USA units can pay for themselves in one month! Send for free catalog. **NYLE STANDARD DRYERS, INC.** Free. *Circle No. 1260.*

SUPERGRIT® SANDING/REFINISHING CATALOG CLOSE-OUT SHEET—Belts (aluminum oxide, silicone carbide zirconia), discs (plain, PSA, Hook & loop vacuum), sheets (cabinet, crocus, emery, non-loading, waterproof), rolls (cloth or hook & loop), bowl turning & lathe supplies, dust masks, scuff pads, tack cloths, tape. **RED HILL CORP.** Free. *Circle No. 1267.*

"WOOD-FRIENDLY"™ L606 MOISTURE METER—uses advanced electromagnetic wave technology to accurately measure wood moisture content from 6% to 30% to a depth of ¾". No pins to "abuse" wood and leave ugly holes. Check out boards from top to bottom in just seconds before you buy and avoid the headaches of splitting, warpage, delaminating and failed glue joints. The Wagner L606's convenient pocket size, easy-to-read analog meter, and low price make it a must for anyone working with wood. Literature. **WAGNER ELECTRONIC PRODUCTS, INC.** Free. *Circle No. 1285.*

BITS, BLADES, CUTTING TOOLS

ASK FOR CMT'S CATALOG AND WE'LL GIVE YOU $10!—CMT Tools will send you our free, full-color router bit catalog and we'll give you a $10.00 discount on your first order! CMT bits feature anti-kickback design, non-stick coatings and micrograin carbide cutting edges. Our catalog is packed with accessories, project ideas and safety tips—it's one catalog you'll want to keep! **CMT TOOLS, INC.** Free. *Circle No. 1310.*

WOODWORKER'S RESOURCE

TO ORDER THESE BOOKLETS, USE COUPON ON PAGE 96

WOODWORKER'S RESOURCE

1996 EAGLE AMERICA WOODWORKING CATALOG—Top Quality American Made cutting tools featuring over 900 router bits. Plus the largest selection of American Made saw blades, shaper cutters, rosettes, brad points and more. Over 2,500 unique and hard to find tools and accessories. **EAGLE AMERICA CORP.** Free. *Circle No. 1320.*

FREUD—Premier line of carbide-tipped sawblades, router bits, shaper cutters and other woodworking tools, Freud offers a full-line on anti-kickback carbide-tipped router bits. Send for a free new router bit catalog. **FREUD.** Free. *Circle No. 1321.*

SUPER-SMOOTH, EXTRA-DURABLE, CARBIDE-TIPPED CIRCULAR SAW BLADES—Get a smooth-as-sanded surface with our all-purpose 40-tooth Woodworker Blade. You will be able to rip and cross-cut 1 – 2 in. rock hards and soft woods with an unbelievably smooth finish. You will also be able to cross-cut oak and birch ply-veneers with no bottom splinters. Send today for our information pack. **FORREST MFG. CO., INC.** Free. *Circle No. 1322.*

PRODUCTION QUALITY CARBIDE TIPPED ROUTER BITS—Large discounts. New expanded catalog featuring a huge selection of Carbide Tipped Router Bits, Raised Panel Door Sets, Shaper Cutters, Solid Carbide Bits, The Router Speed Control, plus our unique line of clamps, tools and supplies. Save 50% to 70%. Value, quality, and prompt service guaranteed! **MLCS LTD.** Free. *Circle No. 1350.*

OLSON SAW COMPANY FOR ALL YOUR SCROLL AND BAND SAW BLADE NEEDS!—Contact Olson for a complete listing of companies that sell their extensive line of superior quality band and scroll saw blades for all your woodworking needs, including the new PGT™ Scroll Blade—"The Best" scroll saw blade available! A catalog of every type of scroll saw blade used on nearly every domestic and imported saw is also available. **OLSON SAW COMPANY.** Free. *Circle No. 1367.*

HARDWARE/ WOOD PARTS

HARDWARE CATALOG—A unique 48-page catalog of the very finest in classic, traditional solid brass cabinet hardware. All of British or No. American manufacture. Double & single post handles, knobs, escutcheons, standard & specialty hinges, box hardware, brass screws, castors, latches, catches, locks, and more. **GARRETT WADE CO.** $3.00. *Circle No. 1427.*

INCOME OPPORTUNITIES

SECURE FUTURE IN FURNITURE RESTORATION WITH MINUTEMAN—Earn $200–$1,000 per day stripping, repairing, refinishing, mirror resilvering, veneering and more at home or in shop; part- or full-time. We provide complete training; no experience necessary. FREE workshop teaches you latest in furniture restoration. Featuring Amity, the first complete line of water-based furniture restoration products. Catalog. **MINUTEMAN.** Free. *Circle No. 1661.*

MISCELLANEOUS

MECHANISMS FOR MAKING WOODEN BARREL PENS—Pencils/Roller Ball Pens/Fountain Pens. High quality. Low prices. Wholesale/Retail. Plus other related items. **BEREA HARDWOODS CO.** $1.00. *Circle No. 1900.*

STEELMASTER BUILDINGS—are available in almost any size for almost any use. From 10' to 100' wide and any length imaginable. Whether you need a back yard shop... an industrial shop... equipment storage building... whatever your requirements, you'll find a Steelmaster that's just the right size for the job. Our buildings are so easy to construct, most owners opt to construct their buildings themselves which adds up to even bigger savings. Send for information. **STEELMASTER.** $1.00. *Circle No. 2030.*

IF YOU ARE INTERESTED IN RESTORING ANTIQUES—this 280-page catalog packed with unusual, hard-to-find items is just for you. Included are hundreds of essential items for antique restoration including top quality brass reproduction hardware, oil lamps and accessories, numerous wood component repair parts and kits, caning and basketry supplies, everything needed for wood refinishing, related tools, books, and a complete line of upholstery equipment and supplies. All at wholesale prices. Send for this informative catalog. **VAN DYKE'S RESTORERS.** $1.00. *Circle No. 2077.*

CONVERTIBLE SUNSPACE—Unique new concept for year-round enjoyment. Insulated winter sunroom converts to a breezy screen room in summer. The two-in-one Sun-Porch features do-it-yourself assembly, shatter-resistant glazing, no special foundation. Colorful catalog, prices, sent first-class mail. **VEGETABLE FACTORY, INC.** $2.00. *Circle No. 2078.*

WHOLESALE GLASS BROKERS—High quality glass shipped to your door directly from the finest manufacturers. Table tops, tempered glass; shelves, 1/4" to 1" thick; beveled glass, custom shapes; tinted glass, and much more! Your one-stop glass source. Idea catalog. **WHOLESALE GLASS BROKERS.** Free. *Circle No. 2079.*

LEGAL IVORY—Virtually identical to animal ivory. Tagua is the nut from a tropical palm tree. Ideal for jewelry, knobs, small turnings, inlay, or scrimshaw. Available in 3 sizes. Send for information. **WOODWORKERS SOURCE.** Free. *Circle No. 2090.*

CARVING SUPPLIES

WOOD CARVING MACHINES AND ACCESSORIES—make all types of wood carving easy, fun and profitable. The machines do the work. Whether for sign carving, flat 3-D, decoys, panels, gun stocks or furniture, we have the proper machine for the job. Professional woodcarving for the hobbyist and superior quality for the professional. Begin your hobby or full or part-time business by ordering our catalog and price list. **MARLIN INDUSTRIES.** $1.00. *Circle No. 2150.*

ELECTRIC WOOD CARVING TOOLS—Sugino Auto-Mach electric carving tool chisels wood at up to 10,000 VPM. Safe, lightweight, easy-to-use, the pressure-activated head controls carving speed and depth, speeds carving faster than mallet and chisel methods. Professional quality suitable for novice and journeyman carver. Wide variety of hardened steel cutting blades. Operates on household current. **SUGINO CORP.** Free. *Circle No. 2170.*

WOOD CARVERS SUPPLY INC.—Serving with pride since 1955. Family owned & operated with superior customer service & a large selection of quality carving supplies. Each order is inspected 3 times before leaving our warehouse, delivered fast & backed by a 30 day money back guarantee. Discover the joy & relaxation of wood carving. Order our superb color 76 page catalog with over 2,000 items including hand & power carving tools, books, knives & much more. Join 1,000s of happy customers by sending $2 for a two year catalog subscription. **WOOD CARVERS SUPPLY, INC.** $2.00. *Circle No. 2190.*

CLAMPS

MERLE ADJUSTABLE CORNER CLAMP—Quick & easy to use. It forces your work into square. Fully adjustable from 2¾" x 2¾" to 69" x 69" in. Perfect for clamping picture frames, cabinets, or anything that requires 90° corner clamping. The Merle Clamp is cast aluminum & steel construction, a true industrial quality tool. Send today for information. **MLCS LTD.** Free. *Circle No. 2250.*

CLOCKS

KLOCKIT—The leading supplier of clock-making supplies for over 25 years: Quartz and mechanical movements, clock inserts, dials, easy-to-follow plans and kits for all skill levels. **KLOCKIT.** Free. *Circle No. 2335.*

FASTENING PRODUCTS

SQUARE DRIVE SCREWS—Thousands agree—once you try them you will never want to use anything else! The square drive recess virtually eliminates work-damaging driver bit "cam-out," the deep threads result in exceptional holding power, and they are heat treated for strength. Sizes from #4 x ¾" to #12 x 4", with stainless steel, solid brass, brass plated, and zinc plated available. Quantity discounts. Send for literature. **McFEELY'S.** $1.00. *Circle No. 2450.*

SHOWS & SEMINARS

SCROLLAMERICA®—Scroll saw seminars throughout the U.S. and Canada with "hands-on", personal instruction. Limited class size assures individual attention and satisfaction. Bring your own saw (some rentals available). Spouses using the same saw admitted for half price. Send for free color folder offering a complete listing of dates and locations. **SCROLLAMERICA®.** Free. *Circle No. 2800.*

****THE WOODWORKING SHOWS* MACHINERY, TOOLS AND SUPPLIES***—Hundreds of products for the woodworker demonstrated and sold at discount prices at every *Woodworking Show*. In-depth seminars and free workshops on a variety of woodworking topics. Shows are scheduled in 27 cities. Send for free brochure. ***THE WOODWORKING SHOWS*.** Free. *Circle No. 2900.*

WOODWORKER'S RESOURCE

Better Homes and Gardens®
WOOD Magazine, December 1995
Dept. DCWO95
P.O. Box 11736
Riverton, NJ 08077-7931

TO ENSURE PROMPT HANDLING OF YOUR ORDER FOLLOW THESE INSTRUCTIONS:

- **Circle your choice**
- **Enclose check or money order for cost of booklets plus $2.00 service charge (no stamps accepted)**
- **NO FOREIGN ORDERS ACCEPTED**
- **Send coupon and remittance to address above**
- **ALLOW 4-6 WEEKS FOR DELIVERY**
- **Coupon expires January 9, 1997**

WOOD SUBSCRIPTION

A 1 year WOOD subscription (9 issues) for $24.97 (U.S. price)—a $19.58 savings off newsstand rate (Circle No. 4000). Allow 6-8 weeks for first issue. Be sure to include payment with total below. NO FOREIGN ORDERS ACCEPTED ON THIS COUPON.

Circle numbers below corresponding to items in this issue. Please include $2.00 for handling charge.

2 ....$1.00	96 ....$2.00	401 ....$2.00	610 ....$5.00	1002....Free	1285....Free	2078 ....$2.00
3....Free	99....Free	420 ....$1.00	615 ....$6.00	1060 ....$2.00	1310....Free	2079....Free
15....Free	160 ....$1.00	440....Free	810 ....$1.00	1065 ....$1.00	1320....Free	2090....Free
20 ....$1.00	230 ....$1.00	443 ....$3.00	820 ....$1.00	1075 ....$1.00	1321....Free	2150 ....$1.00
44....Free	315 ....$1.00	445 ....$3.00	830 ....$2.00	1085 ....50¢	1322....Free	2170....Free
46....Free	320 ....$2.00	465 ....$1.00	855....Free	1123 ....$2.00	1350....Free	2190 ....$2.00
49 ....$2.00	323....Free	475....Free	860....Free	1229....Free	1367....Free	2250....Free
78 ....$1.00	324 ....$1.00	510 ....$1.00	877 ....50¢	1245....Free	1427 ....$3.00	2335....Free
84....Free	330 ....$4.00	512....Free	925....Free	1250....Free	1661....Free	2450 ....$1.00
86....Free	331 ....$2.00	530....Free	940....Free	1251....Free	1900 ....$1.00	2800....Free
91....Free	345 ....$3.00	592 ....$1.00	955....Free	1260....Free	2030 ....$1.00	2900....Free
92 ....$1.00	365 ....$2.00	598 ....$1.00	965....Free	1267....Free	2077 ....$1.00	4000 ....$24.97

Name (please print) _____

Address _____

City _____

State _____ Zip Code _____

Phone (Optional): – –

I AM ENCLOSING:

$ _____ for priced items

$ 2.00 for handling

$ _____ total remittance

BOSCH HOLIDAY BLOWOUT!

BOSCH SUPER SPECIAL HOLIDAY OFFER

PURCHASE ANY COMBINATION OF SKIL OR BOSCH POWER TOOLS & ACCESSORIES AT ONE TIME TOTALING $500 OR MORE & RECEIVE A SKIL CORNER DETAIL SANDER ABSOLUTELY FREE - LIMIT ONE PER ADDRESS. QUANTITIES ARE VERY LIMITED!

1003VSR	3/8" VSR DRILL W/KEYLESS CHUCK	85
1194VSR	1/2" VSR, 2 STAGE HAMMER DRILL	145
1272D	3" X 24" DUSTLESS BELT SANDER	208
1273D	4" X 24" DUSTLESS BELT SANDER	214
1273DVS	4" X 24" VS DUSTLSS BELT SANDER	229
1370DEVS	6" VS DSTLS RNDM ORB SNDR	234
1584VS	CLIC BARREL HANDLE JIG SAW, VS	148
1584VSW	1584VS JIG SAW W/CASE & 10 BLADES	169
1584DVS	BARREL HANDLE JIG SAW, DUSTLS	189
1584DVSW	1584DVS JIG SAW W/CASE & 10 BLADES	209
1587VS	TOP HANDLE JIG SAW, VARSP	148
1587VSW	1587VS JIG SAW W/CASE & 10 BLADES	169
1587DVS	TOP HANDLE JIG SAW, DUSTLESS	189
1587DVSW	1587DVS JIG SAW W/CASE & 10 BLADES	209
1604A	ROUTER	142
1604AW	1604A ROUTER WITH CASE	156
1608	LAMINATE TRIMMER	97
1609KX	DELUXE INSTALLERS KIT W/4 BASES	229
1613EVS	2 HP VAR SP PLUNGE ROUTER	198
1613EVSK	1613EVS 2W/RA1051 DELUXE EDGE GUIDE	209
1614EVS	1 1/4 HP VAR SP PLUNGE ROUTER	158
1615EVS	3 1/4 HP VAR SP PLUNGE ROUTER	289
1615EVSK	1615 EVS W/RA1051 DELUXE EDGE GUIDE	304
3051VSRK	9.6V CRDLS KIT W/2 BATT KEYLESS	139
3283DVS	5" VS DUSTLESS RANDOM ORBIT	95
3283DVSK	INCLUDES CASE, SANDER & ACCESSRS	119
3725DVS	5" DUSTLESS VS RANDOM ORBIT SANDER	149
3725DVSW	5" DUSTLS VS RANDM ORBIT SANDER W/CS	159
3727DVS	6" DUSTLESS VS RANDOM ORBIT SANDER	154
3727DVSW	6" DSTLS VS RANDOM ORBIT SANDER W/CS	164
B1650K	BISCUIT JOINER KIT	154
B1650KW	BISC JOINR KIT W/250 BISC & GLUE BOTTLE	163
B4050	*NEW* IN LINE GRIP JIGSAW	113
B4050K	B4050 W/3 EXTRA LONG BLADES	119
B7000	TRIANGULAR CORNER SANDER	68
B7000A	B7000 W/EXTENDER PAD & 12 SHTS PAPER	79
B7001	VAR SP CORNER SANDER	91
B7001A	B7001 W/EXTENDER PAD & 12 SHTS PAPER	102

BOSCH CORDLESS DRILL SUPER SPECIAL

PURCHASE ANY BOSCH CORDLESS KIT LISTED BELOW & RECEIVE A SKIL SHOP CLOCK ABSOLUTELY FREE - LIMIT ONE PER ADDRESS & QUANTITIES ARE VERY LIMITED!

3300K	12V CRDLS VSR DRILL W/2 BAT, CS & CHRG	193
3310K	12V CRDLS W/T HANDLE W/2 BAT, CS & CHRG	197
3220	9.6V CORDLESS IMPACT DRIVER KIT	194
3500	12V CORDLESS HAMMER DRILL KIT	197
3054VSRK	12V CORDLESS KIT W/2 BAT, CASE	185
B2300K-06	12V CRDLS DRILL KIT W/2 BATT & LIGHT	174

OUTRAGEOUS HOLIDAY OFFER

PURCHASE ANY SKIL OR BOSCH TOOL BETWEEN 10/1/95 & 12/31/95 AND TAKE $20.00 OFF OF ANY SKIL OR BOSCH PURCHASE OF $100.00 OR MORE BETWEEN 1/1/96 AND 3/31/96. CALL FOR COMPLETE DETAILS!

SKIL

77	7 1/4" WORM DRIVE CIRCULAR SAW	145
77K	77 WORM DRIVE SAW WITH CASE	156
77M	7 1/4" MAGNESIUM WORM DRIVE SAW	164
77MK	77M WORM DRIVE SAW WITH CASE	175
1605-02	BISCUIT JOINER	134
1605-02K	1605-02 W/250 BISCUITS & GLUE BOTTLE	143
2736-04	12V VSR CORDLESS DRILL KIT	147
2736-04K	2736-04 W/12 VOLT LANTERN	155
3400	10" TABLE SAW W/CARB BLADE	187
3400K	3400 TABLE SAW W/CARBIDE BLADE & STAND	209

Jorgensen

ITEM	JAW LENGTH	OPEN CAP	OUR PRICE EACH	BOX OF 6
ADJUSTABLE HANDSCREWS				
#0	8"	4 1/2"	11.70	57.95
#1	10"	6"	12.50	67.95
#2	12"	8 1/2"	14.50	77.95
STYLE 97 2 1/2" THROAT 1/4" x 3/4"				
3706	6"		6.00	32.50
3712	12"		6.50	35.00
3718	18"		6.95	37.75
3724	24"		7.95	42.50
3730	30"		8.80	47.75
3736	36"		9.95	53.95
PONY CLAMP FIXTURES				
#50	3/4" BLACK PIPE CLAMPS			7.90
	BOX OF 12 $89.95			
#52	1/2" BLACK PIPE CLAMPS			6.75
	BOX OF 12 $72.95			
PONY SPRING CLAMPS - 3201HT 1" .. 1.25				
3202HT 2" 1.79	3203HT 3" 3.99			

HITACHI

C8FB2	8 1/2" SLIDE COMPOUND MITER	548
C10FC	10" COMPOUND MITER SAW	255
C10FS	NEW 10" SLIDE COMPOUND MITER SAW	745
M12V	3 HP VAR SPEED PLUNGE ROUTER	235
NT45A	18 GA. FINISH NAILER W/CASE	289
NV83A	FULL HEAD CONSTRCTN COIL NAILER	429
P20SB	3 1/4" PLANER, 3.4 AMP	92
TR12	3 HP PLUNGE ROUTER	192

ALL CHECKS WILL BE HELD 10 BUSINESS DAYS
WE ACCEPT VISA, MASTERCARD, DISCOVER, & AMERICAN EXPRESS ©

INTERNATIONAL TOOL CORPORATION

BUSINESS HOURS:
MON-FRI 8-5 PM EST.
SATURDAY: 8-12 EST

•2590 DAVIE RD., DAVIE FLORIDA 33317

FAX US YOUR ORDER AT 1-305-792-3560

• FREE FREIGHT & SAME DAY SHIPPING

ON MOST UPS ORDERS OVER $50 MINIMUM PURCHASE WITHIN THE CONTIGUOUS U.S.A.

1-800-338-3384

GIFT CERTIFICATES AVAILABLE - QUANTITIES LIMITED - NOT RESPONSIBLE FOR TYPOGRAPHICAL ERRORS - PRICES SUBJECT TO CHANGE WITHOUT NOTICE

PORTER-CABLE

Model 9444 - Profile Sander Kit OUR PRICE $114.00

100	7/8 HP ROUTER	$104
310	PRODUCTION LAMINATE TRIMMER	144
314	4 1/2" TRIM SAW	141
330	SPEED BLOCK FINISHING SANDER	59
332	QUIKSAND 5" RNDM ORB W/STIKIT PAD	65
332K	332 W/CASE & 100 SHEETS PAPER	94
333	QUIKSAND W/HOOK & LOOP, DUSTLS	74
333K	333 W/CASE & 50 SHEETS PAPER	102
334	QUIKSAND W/STIKIT, DUSTLESS	74
334K	334 W/CASE & 100 SHEETS PAPER	102
340	1/4 SHT FIN SANDER W/DUST P/U	49
345	SAW BOSS 6" CIRCULAR SAW	104
347K	7 1/4" FRAMERS SAW, 15 AMP WITH CASE	127
351	3" X 21" BELT SANDER	156
352	3" X 21" BELT SANDER W/DUST BAG	162
352VS	3" X 21" BELT SANDER DUSTLESS W/VAR SP	165
360	3" X 24" BELT SANDER W/DUST BAG	197
361	3" X 24" BELT SANDER	189
362	4" X 24" BELT SANDER W/DUST BAG	206
363	4" X 24" BELT SANDER	199
410	BETTERLEY UNDERSCRIBE TRIMMER	148
444	PROFILE SANDER	85
447	7 1/4" FRAMERS SAW W/BRAKE 15 AMP	137
505	1/2 SHT FIN SANDER	123
511	CYLINDRICAL LOCK INSTALLATION KIT	138
550	NEW POCKET CUTTER	178
552	PRODUCTION POCKET CUTTER	508
556	BISC JOINER W/CASE & TILT FENCE	137
556K	SAME AS ABOVE W/1000 BISCUITS	157
690	1 1/2 HP ROUTER W/1/4" & 1/2" COLLETS	136
690K	690 W/CS, EDGE GUIDE, & TEMP GD KIT	189
691	1 1/2 HP "D" HANDLE ROUTER	152
691K	691 W/CASE, EDGE GD & TEMP GD KIT	209
693	PLUNGE BASE ROUTER, 1 1/2 HP	168
695	SHAPER TABLE W/ 1 1/2 HP ROUTER	222
696	SHAPER TABLE	127
743K	7 1/4" FRAMERS SAW, LEFT SIDED WITH CASE	128
843	7 1/4" FRAME SAW, 15 AMPS	138
2620	3/8" VSR DRILL, 0-1200 RPM W/CHK	87
2621	3/8" VSR DRILL, 0-1200 RPM, KEYLESS	87
5008	DOVETAIL TEMPLATE	76
5009	MORTISE & TENON JIG	47
5116	OMNI JIG	256
6931	PLUNGE ROUTER BASE	72
7116	NEW 24" OMNIJIG	292
7310	LAMINATE TRIMMER, 5.6 AMP	94
7312	OFFSET LAMINATE TRIMMER	127
7499	CUTOUT TOOL	62
7518	3 1/4 HP FIXED BASE ROUTER-5 SPEED	266
7519	3 1/4 HP FIXED BASE ROUTER-1 SP	237
7536	2 1/2 HP FIXED BASE ROUTER	204
7537	2 1/2 HP FIXED BASE "D" HNDL RTR	213
7538	3 1/4 HP PLUNGE ROUTER-1 SPEED	242
7539	3 1/4 HP PLUNGE ROUTER-5 SPEED	268
7549	TOP HANDLE BAYONET SAW	127
7549K	7549 W/CASE & 10 BLADES	149
7649	ELECTRONIC VS BARREL GRIP JIG SAW	147
7700	NEW 10" LASERLOC MITER SAW	344
7800	DRYWALL SANDER	326
7810	POWER TOOL TRIGGERED WET/DRY VAC	252
9118	PORTA PLANE KIT W/CASE, CRBD BLD	214
9314	4 1/2" TRIM SAW KIT	157
9345	SAW BOSS 6" CIRCULAR SAW KIT	127
9444	PROFILE SANDER KIT WITH ACCESSORIES	113
9447	7 1/4" CIRC SAW W/BRAKE & CASE	158
9647	TIGER CUB RECIP SAW KIT	118
9737	RECIPRG TIGER SAW, 9.6A, QUICK CHNG CHUCK	159
9843	7 1/4" LEFT SIDE SAW W/BRAKE & CASE	158
9853S	12V CRDLS KIT W/2 BAT, CASE	163
97310	LAMNT TRIMMR KIT W/3 BASES & CS	184
97335	5" RANDOM ORBIT SANDER W/CASE	129
97336	6" RANDOM ORBIT SANDER W/CASE	134
7335K	5" RANDM ORB W/STEEL CASE, 73333 & PAPER	162
7336K	6" RANDM ORB W/STEEL CASE, 73333 & PAPER	165

$ INTERNATIONAL TOOL EXCLUSIVE OFFER $

Purchase any Porter Cable power tool and receive either **"THE WORLD OF PORTER CABLE ROUTERS"** or **"THE WORLD OF PORTER CABLE SANDERS"** video tape for only **$2.95** (regular price $5.95)! Each video covers subjects from adjustments & set up, to techniques & accessories to make your tool more versatile & enjoyable to use! Included in each video is a **COUPON GOOD FOR $5.00 OFF** of a future Porter Cable accessory purchase from **INTERNATIONAL TOOL**. Call for complete details!

Panasonic

EY6100EQKW	*NEW* PREDATOR CORDLESS KIT W/KEYLESS CHUCK, 2 IRONMAN BATTERIES, CHARGER & CASE, VSR	209
EY6181CQKW	*NEW PREDATOR* 9.6V CORDLESS KIT VSR W/KYLS CHUCK, 22 STAGE CLUTCH W/2 BAT, CASE & 15 MIN CHRGR	162
EY6780CQK	9.6V CORNER MASTER W/15 MIN CHARGER, CASE	199

SUPER HOLIDAY SPECIAL

PURCHASE THE EY6100EQKW & RECEIVE AN EY3790B 12V CORDLESS LANTERN W/ADJ. HEAD & HANDLE *ABSOLUTELY FREE!*

AIRCAT

0241NK	18 GAUGE BRAD NAILER 3/8"-1 9/16" WITH CASE & 5000 NAILS	97
0250NK	18 GAUGE BRAD NAILER 3/4"-2" W/CASE & 5000 NAILS	163
0350NK	15 & 16 GA. FINISH NAILER 3/4"-2" W/CASE & 5000 ASSORTED BRADS	193
0565T	ANGLE FINISH NAILER 1"-2 1/2"	204
0626NK	NARROW CROWN 1/4" STAPLER 1/2"-1" WITH CASE & 5000 STAPLES	104
0638P	3/4"-1 1/2" NARRW CRWN STPLR W/CS	179
EZ-1	SHOOTS 1/4", 3/8", 1/2" CRN STAPLES & BRADS, 5/8" CAP, W/CASE & 5000 ASSORTED FASTENERS	97

POWERMATIC

ALL PRICES INCLUDE FREIGHT! IN CONTIGUOUS U.S.A.

13	6" X 89" EDGE SANDER	644	64	1 1/2 HP TABLE SAW W.BIESMEYER FENCE	739
14	OSCILLATING SPINDLE SANDER	298	64L	1 1/2 HP TABLE SAW W/50" BIES. FENCE	839
15	15" PLANER	1295	66	3 HP, 1 PH 10" T.A. SAW W/50" FENCE	1945
54	6" JOINTER WITH ENCLOSED STAND	574	66	5 H P, 1 PH 10" T.A. SAW W/50" FENCE	2045
60	8" LONG BED JOINTER	1695	73	1 1 /2 HP DUST COLLECTOR	394

OUR PRICES WILL NOT BE BEAT!

makita

6172DWE	7.2V CDLS DRILL KIT W/2 BATT	99
6095DWE	9.6V CDLS DRILL KIT W/2 BATT	139
DA391DW	9.6V ANGLE DRILL KIT	175
6211DWE	12V KIT W/2 BATTERIES	169
5007NBK	7 1/4" CIRC SAW W/CASE & BLADE	129
LS1011	10" COMPOUND MITER	509
LS1211	12" COMPOUND MITER	839
N1900B	3 1/4" PLANER	129
BO5001	5" RANDOM ORBIT SANDER	67
DA3000R	3/8" ANGLE DRILL	187

Emglo

AM78HC4V	1 1/2 HP COMPRESSOR	$308.00

DELTA

14-650	HOLLOW CHISEL MORTISER	289
17-960	OSCILLATING SPINDLE SANDR ATTCHMT	84
22-540	12" BENCH TOP PLANER	385
23-710	NEW SHARPENING CENTER	174
28-180	BENCH TOP BAND SAW	157
31-460	4" BELT/6" DISC SANDER	127
34-182	TENONING JIG	84
36-250	10" SLIDE COMPOUND MITER SAW	489
37-070	*NEW* 6" VS BENCH JOINTER	258
40-560	16" SCROLL SAW, 2 SPEED	177
40-640	20" VAR SP SCROLL SAW	295

DEWALT

DW420	5" RANDOM ORBIT SANDER, PSA	68
DW421	5" DSTLS RNDM ORB SANDER, VELCRO	77
DW430	3" X 21" DUSTLESS BELT SANDER	167
DW431	3" X 21" DSTLS BELT SANDER VAR SP	183
DW443	6" ROS SANDER VAR SP, VELCRO	139
DW444	SAME AS ABOVE WITH PSA PAD	139
DW610	1 1/2 HP ROUTER, 9 AMP	148
DW615	1 1/4 HP PLUNGE ROUTER, VAR SP	164
DW625	3 HP HVY DTY PLUNGE RTR, VAR SP	275
DW670	*NEW* LAMINATE TRIMMER WITH GUIDE	97
DW682K	BISCUIT JOINER KIT	219
DW935	14.4V TRIM SAW	146
DW935K	14.4V TRIM SW KIT W/BAT, CHRGR, CS	239
DW935K2	DW935K WITH 2 BATTERIES	259
DW972K2	*NEW* 12V CRDLS KIT/W BATTERY & CASE	188
DW991K	14.4V CRDLS KIT W/BATTERY & CASE	199
DW991K2	DW991K WITH 2 BATTERIES	218

DEWALT HOLIDAY BONUS SPECIAL

DW972KS-2 INCLUDES DW972 12V CDLS DRILL, DW930 CORDLESS SAW, 2-12 VOLT BATTERIES, CHARGER & CASE 274

DW991KS-2 INCLUDES DW991 14V CDLS DRILL, DW935 CORDLESS SAW, 2-14.4 VOLT BATTERIES, CHARGER & CASE 349

SUPER SPECIAL! $188
636 OSCILLATING TRIANGULAR SANDER INCLUDES CASE & PAPER ASSORTMENT

SENCO

SLP20	BRAD NAILER W/CASE 5/8"-1 5/8" CAP	278
SFN40	FINISH NAILER 1 1/4"-2 1/2" CAP	396
SLS20	1/4" CRWN STAPLER, 3/8"-1 1/2" OILESS W/CS	258

RYOBI

AP12	12" PORTABLE PLANER	388
BT3000SX	10" TABLE SAW W/FREE STAND	529
DC500K	DC500 KIT W/CASE & 5 PC CHISEL SET	65
DS2000K	2 SP DETAIL SANDR W/CS & 12 PC AST	65
HT20VSK	MULTI ROTARY TOOL W/CS & 101 PC AST	57
ML618	18" WOOD MINI LATHE	209
OSS450	OSCILLATING SPINDLE SANDER	156
SC162VS	16" VS SCROLL SAW	164

Milwaukee

0407-1	12V KYLS CDLS DRILL KIT W/2 BAT, CS	174
6490	10" MITER SAW	264
6494	10" CMPND MITER SAW W/CARB BLADE	322
6507	VAR SPD SAWZALL W/BLADES & CS	144

freud

TR215	8 1/2" SLIDE COMPOUND MITER SAW	369
JS100	BISCUIT JOINER $164 (AFTER REBATE	134)
FT2000E	3 hp ROUTR W/EDGE GUIDE AFTER REBATE	185
EB100	EDGE BANDING SYSTEM	208
EDS132B	13.2V CRDLS DRILL KIT W/2 BAT	209
F410	10" X 40T QUIET BLADE	49
F810	10" X 80T QUIET BLADE	74
LM72M010	10" X 24T FLAT TOP RIP BLADE	36
LU82M010	10" X 60T CROSSCUT/RIP BLADE	45
LU84M010	10" X 50T ATB COMBO BLADE	40
LU85M010	10" X 80 T ATB FOR MIRROR FINISH	58
LU87M010	10" X 24T RIP BLADE THIN KERF	39
LU88M010	10" X 60T CROSSCUT THIN KERF	45
LU89M010	10" X 72T TCH NON FERROUS METAL	57
LU92M010	10" X 80T TCH - BEST FOR LAMINATES	59
LU98M010	10" X 80 T TCH LAMINATES OR WOOD	67
SD308	8" SAFETY DADO WITH CASE	116
SD506	*NEW 8" SUPER DADO SET*	168
94-100	CABINET DOOR SET	158

Print this article

SPECIALISTS IN CURVED WORK

COMPASS PLANES

For centuries, arcs have been a part of woodworking. Whether for function, such as rocking-chair rockers, or beauty, such as arch-top cabinet doors, designers and craftsmen frequently have counted on curves.

A woodworker could saw an arc on an inside or outside edge easily enough, but then came the challenge of smoothing the curve. Compass planes, also called circular planes, provided the means.

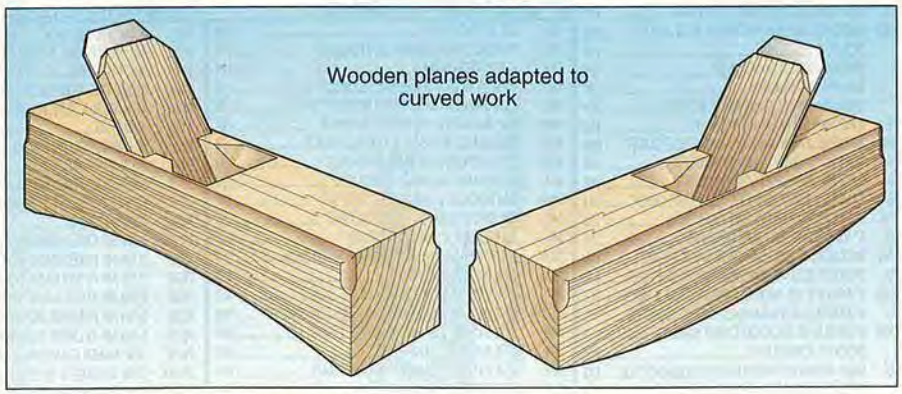

Joiners and cabinetmakers first adapted wooden-bodied jack planes to the task of planing curves. They simply rounded or hollowed the plane's sole to the needed curvature, as shown *above*. Of course, this alteration limited the plane to work only on a curve of that particular radius.

To avoid keeping a pile of planes around the shop, some craftsmen experimented with adjustable compass planes. One scheme involved sawing a kerf across the front and back of the body, parallel to the sole of the plane. Then, the ends of the sole could be flexed up and held with screws or flexed down with wedges. The limited range of adjustment available with such planes proved a drawback.

During the latter part of the 19th century, manufacturers developed comprehensive lines of precision steel and iron planes, including adjustable compass planes. A popular style, though not the first to come onto the market, was the Stanley model 113, shown in the foreground *below left*. Introduced in 1879, the 113 featured a flexible steel sole. Turning the knob at the front adjusted the sole over a wide range of arc radii, from convex to concave. Geared linkage arms moved both ends of the sole up or down simultaneously.

The Keen Kutter K 115, shown on the wood in the photo, was sold by one of Stanley's competitors, the E. C. Simmons Co. The Simmons Co., a hardware retailer, marketed a variety of tools under the Keen Kutter brand name. The K 115, nearly identical to the Stanley 113 plane, was probably manufactured by Sargent.

Stanley manufactured the 113 until 1942. Another design remained on sale until the late 1950s. Presently, Record markets a flexible-sole compass plane similar to that later Stanley model.

Today, a Stanley 113 sells for $50-$100; those built before 1885 go for about twice that. The Keen Kutter K 115 would probably bring $125-$250.

The Stanley 113 compass plane, front, was manufactured in the 1890s. The Keen Kutter K 115, on the wood, dates from the early 20th century.

Stanley 113 from the collection of James Rask, Riverdale, North Dakota.
Keen Kutter K 115 from the collection of Mike Knudson, Bismarck, North Dakota.
Photograph: John Hetherington
Illustration: Kim Downing

The Tool That Your Workshop Needs...

With 208 pages of full-color, our Free Catalog is the biggest in the business. We also think it's the best.

We have the high quality woodworking supplies and tools that are nearly impossible to find anymore. Everything from traditional old-style hand planes and saws to the very latest in power tools and accessories. We've got Precision Measuring tools, Chisels, Carving tools, Turning tools, Sharpening tools, plus Glues, Stains, Top Coats and much more.

Send us a post card or letter with your name and address to the address below. Or Call Toll-Free 800-221-2942 to receive your Free 1995 Garrett Wade Catalog.

Garrett Wade Co., Inc.
161 6th Avenue, Dept. 1057
New York, NY 10013
800-221-2942

And It's Free, From Garrett Wade

Circle No. 44, 855, 1427

Uncap the Power of Polyurethane Glue

- No Mixing
- Waterproof
- Extraordinary Strength
- Sands & Scrapes Easily
- Expands as it Dries
- 30 Minute Open Time
- Exterior/Interior Use
- Fully Guaranteed
- Distributor/Dealer Inquiries Welcome

Tel: (318) 876-2495
Fax: (318) 876-2213

EXCEL

The First Polyurethane Wood Glue in America

The AmBel Corporation, P.O. Box 819, Cottonport, LA 71327

Here's the one thing Belgians don't waffle on.

The Robland X31 is as welcomed in European workshops as a home run in the World Series. We put together a 12" jointer, 12" planer, 10" table saw, 50" sliding table, and a shaper with a mortiser. No cheating. No compromises. Some 1100 lbs. of cast iron stability, with three separate 3HP motors. It stays put. It stays true. and it stays neatly in a little corner of your shop. That's why Belgians call the Robland X31 The Intelligent One Man Shop. About the only thing you can't make on it is breakfast.

LAGUNA TOOLS

(800) 234-1976 • (714) 494-7006 • FAX (714) 497-1346 • 2265 Laguna Canyon Road, Laguna Beach, CA 92651

Circle No. 615

SPRITE ON SKIS

Continued from page 80

Make a colorful character

Paint the carving with acrylic paints. Apply thin washes of color in several coats. (Harley thins liquid acrylics with 5-10 parts of water to one part of paint.) This way, the paint doesn't mask the wood grain and carving texture.

Colors shown are: Sweater, cadmium red medium; knickers, permanent green light; socks, 50-50 mix of ultramarine blue and titanium white; scarf and hair, yellow ocher; hat and mittens, titanium white; face, flesh with rosy highlights for cheeks and lips; and skis, shoes, and tail, burnt sienna.

Paint the eyes next, using the liquid acrylic paints unthinned. Start by painting a burnt umber arch and circle as shown in Step 1 in the illustration, *above right*.)

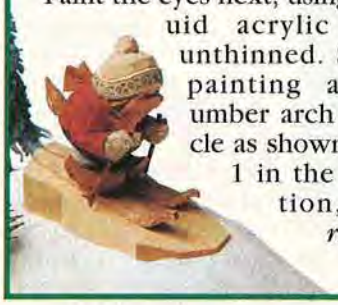

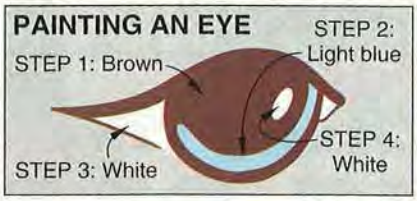

Make each eye about 3/16" high, starting from the ridge across the top of the cheeks. Align the center of the eyeball with the side of the nose. Follow the remaining steps to complete each eye.

After the paint dries, apply a liberal coat of Danish oil, tung oil, or boiled linseed oil to seal and antique the carving. For greater effect, darken the oil with a bit of walnut stain or tinted oil. (Test darkened oil on painted scrapwood, first.) Wipe off the excess, and let the carving dry. Oil the base, skis, and poles, too. (Be sure to dispose of oily rags safely.)

The hat and mittens on the carving shown feature barkrosing for ornamentation. In this traditional Scandinavian technique, fine dust created by sanding tree bark is rubbed into an incised design. (For more on barkrosing, see *WOOD*® magazine no. 61, June 1993, pp. 54-55.)

For barkrosing the carving, wait until the oil dries. Then, draw your design onto the carving with a sharp pencil. Incise the design lines, then rub in the sanding dust. Seal with another coat of oil.

Send him down the hill

Attach Per's skis to the bottoms of his boots with countersunk #6×½" flathead wood screws. Position him on the sloped base, and drill a pilot hole through the bottom of the base into each foot. Counterbore each hole in the base so about 1" of a #6×1½" screw protrudes through the sloped top.

Glue the tail into the tail hole. Slide the ski poles into the holes through the mittens to complete the skiing troll. Then, screw the carving to the base.

Grizzly IMPORTS, INC.
Forstner Bit Blowout!
#70095658
While Supplies Last!
THE MOST ACCURATE AND VERSATILE OF ALL WOOD BITS!
Comes complete inside a protective wood box!
TOP QUALITY!
16pc set MODEL G1673 Reg. $59.95 SALE $39.95 PLUS SHIPPING
7pc set MODEL G1752 Reg. $27.50 SALE $19.95 PLUS SHIPPING
WEST of Mississippi 1-800-541-5537 | EAST of Mississippi 1-800-523-4777
Call now for a *free* tool catalog!
Circle No. 860

Econ-Abrasives
WE MAKE ABRASIVE BELTS ANY SIZE, ANY GRIT!

Standard Abrasive Sheets

CABINET PAPER

	50/pk	100/pk
60D	$16.70	$30.00C
80D	15.60	27.80C
100 thru 150C	14.50	25.60C

FINISHING PAPER

80A	$ 11.15	$18.90C
100 thru 280A	10.00	16.70C

NO LOAD PAPER(white)

100 thru 400A	$12.25	$21.25C

"C" = 100 SHEETS

Velcro® Vacuum Discs
8 Hole pattern for Bosch sanders

Dia.	Grit	Price
5"	60	$ .48ea
5"	80	.46
5"	100 thru 320	.45

* Available in 5 hole pattern *

*Wide Belts*Rolls*Flap Wheels
*Pump Sleeves*PSA Discs
*Router & Wood Bits*Wood Glue

ABRASIVE BELTS
Belts are resin bond cloth with a bi-directional splice, specify grits.

1X30	$ .81 ea	3X24	$ .93 ea
1X42	.81 ea	3X27	.96 ea
1X44	.81 ea	4X21 3/4	1.06 ea
2 1/2X16	.85 ea	4X24	1.10 ea
3X18	.86 ea	4X36	1.35 ea
3X21	.90 ea	6X48	3.50 ea
3X23 3/4	.93 ea	6x89	6.24 ea

OTHER SIZES ON REQUEST

HEAVY DUTY SPRING CLAMPS
Clamps come w/PVC tips and grips.

Size	Price
4"	$1.75 ea
6"	2.25
8"	3.50

JUMBO ROUTER PAD(24" x 36")
It will not allow small blocks of wood to slip out under router or sanding applications. ROUTER PAD ONLY $8.95ea.

JUMBO BELT CLEANING STICK ONLY $8.80

*MasterCard, VISA, C.O.D. or Check
*SATISFACTION GUARANTEED!!!
*CALL FOR *FREE* CATALOG
- TX & NV add appropriate sales tax
- Continental U. S. shipping add $5.50

Econ-Abrasives
P. O. Box W865021
Plano, TX 75086
(214)377-9779

TOLL-FREE ORDERING LINE (800)367-4101
Circle No. 1229

Dusty Tours Santa Claus' Wood Working Shop

YOU KNOW I DON'T LIKE MY BROTHER, WOODY PYLES. WHY DO WE *HAVE* TO VISIT HIM AT SANTA'S WOOD WORKING SHOP *EVERY YEAR*? HE'S ALWAYS SO GLUM AND *THE SHOP IS A MESS.*
SANTA'S WOODWORKING SHOP
NOW, DUSTY. HE'S *FAMILY.* HE'S YOUR BROTHER. AND IT'S CHRISTMAS. WE'RE GOING TO SEE HIM AND ***THAT'S FINAL.***
WELCOME TO THE WONDERFUL WORLD OF SANTA'S WOOD WORKING SHOP!
WHY ARE YOU SO HAPPY? HAS THE DUST FINALLY CLOGGED YOUR BRAIN?
FOR THE LAST 20 YEARS I WAS IN CHARGE OF CLEANING UP THE WHOLE WOOD WORKING SHOP WITH THE HELP OF 28,325 ELVES. IT TOOK ALL YEAR. IT JUST ABOUT DROVE ME CRAZY. THIS CHRISTMAS I'M VERY HAPPY BECAUSE SANTA BOUGHT ME A **CLEANAIR**. THE CLEANAIR USES A UNIQUE THREE-STAGE FILTRATION SYSTEM TO CAPTURE 97% OF THE FLOATING DUST PARTICLES OUT OF THE SHOP. *NOW, CLEAN UP ONLY TAKES* ***TWO ELVES AND ONE CLEANAIR.***
WHAT DID YOU DO WITH THE OTHER 28,323 ELVES?
NOW, SANTA CLAUS HAS ALL **28,323** OF THE WOOD WORKING ELVES ANSWERING THE PHONES TO KEEP UP WITH THE CLEANAIR ORDERS FOR THIS CHRISTMAS.

CleanAir System
260 CFM order # 90175
Suggested List Price $339
NOW $269
$20 shipping

CleanAir System - Heavy Duty
490 CFM order # 90177
Suggested List Price $399
NOW $309
$20 shipping

CleanAir System - Commerical
980 CFM order # 90180
Suggested List Price $699
NOW $499
$25 shipping

And here are just a few more advantages the *CleanAir System* has over the competition...

- Needs no outside venting
- Available for any size shop
- Very quiet operation
- Has no effect on existing room temperature
- Runs on standard house current
- Compact size fits almost anywhere
- Heavy gauge steel cabinet w/ mounting holes
- Contains approx. 24 sq. ft. of filter material
- Easy filter replacement
- 30 day money back guarantee
- One year warranty on all parts
- Built in the USA with a 8 year record of satisfaction!

Why continue fighting the never ending battle with dust? Order NOW and receive absolutely FREE our Extended Lifetime Warranty ($29.95 value!)

NAME_____
ADDRESS_____
CITY/STATE_____
ZIP_____ PHONE_____
☐ PLEASE SEND MORE INFORMATION
☐ I WANT TO ORDER #_____
CHECK, M/C, VISA, DISCOVER, AMEX
CARD #_____ EXP. DATE____

FILTER REPLACEMENT KIT • ORDER # 90176 • $29.95

TOLL FREE 1-800-845-9356

Total Shop
WORLD OF WOODWORKING

DEPT. 3 • P.O. BOX 25429 • GREENVILLE, SC 29616

Circle No. 940

New from OLSON® PGT® Scroll

Free Blade Offer

The experts agree, PGT's are "The Best" Scroll Saw Blades You Can Buy!

The Smoothest Cutting, Most Accurate, & Longest Lasting Scroll Blades Made.

Available from your Olson Dealer
5" Plain End Blades with Reverse Teeth.
Univ. Sizes 5, 7 & 9.

Send for your FREE BLADE in the size of your choice.

(circle size #5, 7 or 9)

Name _____

Address _____

City _____

State _____ Zip _____

The Olson Saw Company
16 Stony Hill Road, Dept. WD
Bethel, CT 06801
Fine Quality Saw Blades Since 1918

Circle No. 1367

FREE TOOL CATALOG!

Your Best Work Starts With Us!

With over 5,000 of the finest woodworking tools in the world, Woodcraft can help you work more efficiently and skillfully than ever. Call for your Free copy today.

1-800-542-9115

WOODCRAFT®

210 Wood County Ind. Park, Dept. 95WI12S
PO Box 1686, Parkersburg, WV 26102-1686

Circle No. 955

Subscribers, please note:

WOOD® magazine subscribers often express interest in products and services which are supplied by our company, Meredith Corporation, and by other reputable firms.

Accordingly, we sometimes send our subscribers offers for books, other magazines or home-related products, and services of potential interest.

We also make subscriber names and addresses available to other firms that are able to supply appropriate products and services. We screen all such offers and take great care to see that information about these products and services is sent only to subscribers who, according to our records, are most likely to be interested.

While we believe the distribution of this information is of benefit to our subscribers, we firmly respect the wishes of any subscriber who does not want to receive it. Should you wish to restrict this, simply send your request to: *WOOD* Magazine, P.O. Box 10263, Des Moines, IA 50336-0263.

Please enclose a current address mailing label. Please be specific as to whether you want to stop all offers from any company including Meredith. We will gladly honor your request.

WOODFAST WOOD LATHES

THE PROFESSIONALS CHOICE

Woodfast wood lathes are used by professional woodturners all over America. Its powerful, sturdy design and large capacity make it the lathe of choice for both professional and serious woodturners.

FEATURES:

16" OR 20" CAPACITY — *VARIABLE SPEED*
SOLID CAST IRON — *3/16" PLATE STEEL BASE*
CAM-LOCK TOOL REST — *CAM-LOCK TAILSTOCK*
AVAILABLE IN 18" OR 39" BETWEEN CENTERS
LIFETIME GUARANTEE

SEND $2.00 FOR INFORMATION ON WOODFAST LATHES AND A COPY OF OUR 84 PAGE COLOR WOODTURNERS CATALOG. $2.00 REFUNDED WITH ORDER.

CRAFT SUPPLIES USA
P.O. BOX 50300
PROVO, UTAH 84605-0030

Circle No. 830

PERFORMAX® - A Planer Plus

Drum and Brush Sanders
for Maximum Performance and Maximum Value

You could get lost comparing the many brands of bench-top planers or you could go beyond to a new way of dimensioning.

The new way is the PERFORMAX® way! Now you can smooth a rough-sawn board to a ready-to-stain finish more efficiently than the combined use of a planer and a hand-held belt sander.

The Performax® way eliminates scraping, planer tear-out, snipe and narrow width limitations that require you to rip and glue.

Plus, a Performax® Drum Sander will dimension and finish sand stock that a planer can't. Craft pieces as short as 2 1/4", veneers as thin as 1/64", cross-grain, end-grain, knotty, burled, scroll saw work, edge-glued and joined stock are all easily handled.

Call for a free brochure and the dealer nearest you.

The genuine Performax® Drum Sander, the only **MADE IN USA** drum sander with patented features. Models are available with 1, 1 1/2 or 5 HP motors to satisfy a wide variety of thicknessing AND fine finish sanding needs.

PERFORMAX PRODUCTS, INC.

1-800-334-4910
(612) 895-9922

12257 Nicollet Ave. So. • WD08 • Burnsville, MN 55337

Circle No. 78

ORDER 1-800-328-0457 MAIL ORDER HOURS M-F 7:00-5:30 C.S.T. SAT 8:00-1:00

1995 TOOL CATALOG AVAILABLE
Call Toll-Free 1-800-328-0457 In Minn. Call (612)224-4859
FAX: (612)224-8263
CHECK • MONEY ORDER • VISA • MASTERCARD • DISCOVER

SEVEN CORNERS ACE HDW. Inc.
216 West 7th St. • St. Paul, MN 55102 • Est. 1933

TOOLS ON SALE™
AMERICA'S LOWEST PRICED TOOLS
FREE FREIGHT TO THE
48 CONTINENTAL STATES ON EVERY ITEM
PRICES SUBJECT TO CHANGE WITHOUT NOTICE

DELTA TOOLS

Model	Description	List	Sale
23-700	Wet/Dry Grinder	234	155
23-710	New Sharpening Center	210	165
23-680	6" Bench Grinder 1/4 HP	86	69
11-950	8" Drill Press	199	128
31-050	1" Belt sander 2.0 amp	104	75
31-460	4" Belt/Disc Sander	198	129
40-560	16" 2 speed Scroll Saw	266	178
11-990	12" Bench Drill Press	276	184
11-090	32" Radial Bench Drill Press	399	305
43-505	1/2" Bench Router/Shaper	399	289
22-540	12" Bench Top Planer	Sale	365
	FREE Set of extra knives included !		
36-220	10" Compound Mitre Saw	350	215
28-180	Bench Band Saw	232	158
28-190	NEW 12" Band Saw	465	395
40-640	20" Bench Scroll Saw	466	295
37-070	NEW 6" v/spd Bench Jointer	337	258
14-650	Hollow Chisel Mortiser	668	289
46-700	12" Wood Lathe	548	449
33-990	10" Radial Arm Saw	818	695
37-280	6" Motorized Jointer	488	389
50-179	3/4 HP 2 stage Dust Collector	483	358
33-055	8-1/4" Sawbuck comp w/legs	865	629
36-040	8-1/4" Compound Mitre Saw	224	149
36-905	30" Unifence	385	249
36-906	50" Delta Unifence	525	299
36-755	10" Tilting Arbor Saw	1264	1039
17-900	16-1/2" Floor Drill Press	462	399
33-060	"Sidekick" Miter Saw	510	389
37-190	6" Deluxe Jointer	554	479
36-275	8-1/4" Builders Saw	444	265
36-210	10" Compound Mitre Saw	438	255
36-070	10" Mitre Saw	284	165
36-630	10" Contractors Saw II	700	579
34-555	Sliding Table	459	329
22-681	13" Planer w/ stand 2 HP	1513	1239
37-154	6" Jointer w/ mobile base	1451	1239
34-444	Contractors Table Saw	812	659
34-445	34-444 Saw w/30" Unifence	1200	829
	above saw comes w/ mobile base		
28-283	14" Band Saw w/enc. stand	910	779
	above saw comes w/ mobile base & fence		
36-250	NEW 10" Slide Compound Saw	825	489

MILWAUKEE TOOLS

6527	NEW Sawzall with case	320	174
6528	above Sawzall w/wired cord	316	174
0407-1	12V Drill w/kyls chuck & 2 batt		172
0406-1	9.6V Drill Kit with 2 batteries	332	159
0231-1	3/8" Drill 0-1700 rpm	148	95
0224-1	3/8" Drill 4.5 amp magnum	227	128
0234-1	1/2" Drill 4.5A mag 0-850 rpm	237	139
0235-1	1/2" Drill w/keyless chuck	237	138
0244-1	1/2" Drill 4.5A mag 0-600 rpm	237	139
0222-1	3/8" Drill 3.5 amp 0-1000 rpm	198	118
0228-1	3/8" Drill 3.5 amp 0-1000 rpm	195	115
0375-1	3/8" close quarter Drill	237	139
0379-1	1/2" close quarter Drill	268	158
6546-1	cdls Scrwdvr 200 & 400 rpm	141	84
6547-1	6546-1 w/bits, 1/4" chuck, & cse	176	105
5399	1/2" D-hdle Hammer Drill Kit	332	194
6507	Original SawZall with case	264	152
5397-1	3.8" var. spd Hammer Drill Kit	255	145
5371-1	1/2" var. spd Hammer Drill Kit	340	188
3107-1	1/2" v/spd right angle Drill Kit	399	225
6754-1	Drywall Gun 0-4000 5.4 amp	186	114
3300-1	1/2" var. spd right angle Drill	356	209
5680	Router 2 HP w/ 1/4" & 1/2" collets	362	165
6142	4-1/2" Grinder w/cse & access.	208	124
6749-1	Drywall Gun 0-2500 5.4 amp	218	132
6365	7-1/4" Circular Saw 13 amp	218	125
6366	6365 w/fence & carbide blade	228	129
6368	6365 w/fence,carb. blde,& cse	249	139
6377	7-1/4" Worm Drive Saw	330	189
6256	Top Handle Jig Saw	264	154
6490	10" Mitre Saw	444	248
6491	6490 w/ carbide blade & bag	532	319
6494	10" Compound Mitre Saw	444	315
0422-1	NEW 12V Hammer Drill w/2 batt	430	249
0431-1	NEW 12V Drill w/ 2 batteries	385	229

FREUD CARBIDE TIPPED SAW BLADES
5/8" Bore - Industrial Grade

Item	Description	Teeth	List	Sale
LU72M010	Gen Pur. A.T.B. 10"	40	69	39
LU82M010	Cut-off 10"	60	93	45
LU84M011	Comb 10"	50	78	42
LU85M010	Super Cut-off 10"	80	115	59
LM72M010	Ripping 10"	24	69	38
LU73M010	Cut off 10"	60	84	45
LU87M010	Thin Kerf 10"	24	72	39
LU88M010	Thin Kerf 10"	60	88	45
LU98M010	Ultimate 10"	80	128	68
LU91M010	Compnd Mitre 10"	60	88	54
F410	NEW Quiet Blade 10"	40	95	49
F810	NEW Quiet Blade 10"	80	135	74
TK303	7-1/4" Finishing	40	38	25
TK906	10" Combo	50	53	32
SD308	8" Dado - Carbide		230	119
SD506	6" carbide w/case & shims		292	155
SD508	8" carbide w/case & shims		344	166
F10	2-1/8" x 3/4" Biscuit 1000 Qty		43	29
F20	2-3/4" x 1" Biscuit 1000 Qty		45	29
FA	Assorted Biscuits 1000 Qty		45	29
FB100	16 piece Forstner Bit Set		338	189
94-100	5 pc. Router Bit Door System		320	159
TR215	10" Slide Cmpd Mitre Saw		688	369

The following tool has a $20.00 rebate thru 1/31/96

FT2000E	3-1/4 HP v/sp Plunge Router	410		209

The following tools have a $30.00 rebate thru 1/31/96

JS100	Biscuit Jointer w/ case	334	164
JS102	Biscuit Jointer w/fence & case	355	179

MAKITA TOOLS

Model	Description	List	Sale
6172DWE	3/8" v/spd Drill Kit w/ 2 batt	220	109
5090DW	3-3/8" Saw Kit 9.6 volt	270	145
ML900	Incandescent Flashlight 9.6V	Sale	37
DA391DW	3/8" angle Drill Kit 9.6 volt	312	179
6012HDWE	2 speed Drill Kit w/2 batt.	243	135
6095DWE	6095DW Drill Kit w/2 batteries	270	139
6095D	6095DW Drill only & case	Special	79
632007-4	9.6 volt Battery	47	30
632002-4	7.2 volt Battery	39	28

NEW CORDLESS DRILLS WITH HIGH CAPACITY BATTERIES

6202DWG	9.6V 3/8" Drill Kit w/ LED batt	390	219
6212DWG	12V 3/8" Drill Kit w/ LED batt	412	228
6312DWG	12V 1/2" Drill Kit w/ LED batt	432	239
6201DWHE	9.6V 3/8" Drill Kit w/ 2 batt.	351	175
6211DWHE	12V 3/8" Drill Kit w/ 2 batt.	368	185
6311DWHE	12V 1/2" Drill Kit w/ 2 batt.	399	205
5007NBA	7-1/4" Saw w/electric brake	263	135
9900B	3" x 21" Belt Sander w/bag	344	175
9924DB	3" x 24" Belt Sander w/bag	329	189
4301BV	Orb. var. spd Jig Saw 3.5A	292	155
JR3000V	var. speed Recip Saw w/case	252	139
9820-2	Blade Sharpener	394	215
N1900B	3-1/4" Planer with case	244	129
N9514B	4" Disc Grinder 4.6 amp	111	65
B04552	1/4 sheet Pad Sander w/bag	98	55
DA3000R	3/8" Angle Drill	314	179
2708W	8-1/4" Table Saw	585	305
2711	10" Table Saw with brake	1067	569
6405	3/8" Drill Rev. 0-2100 rpm	112	68
6510LVR	3/8" Drill Rev. 0-1050 rpm	168	94
6013BR	1/2" Drill Rev. 6 amp	280	149
9401	4" x 24" Belt Sander w/bag	378	229
4303C	var. speed Orbital Jig Saw	351	205
5077B	7-1/4" Hypoid Saw	281	155
5007NB	7-1/4" Circular Saw 13 amp	232	124
5007NBK	5007NB Saw w/ plastic case	Sale	129
LS1011	10" Slide Compound Saw	946	525
LS1211	New 12" Slide Cmpd Saw	1550	795
3901	New Plate Joiner Kit	372	219

SENCO AIR NAILERS

SFN1	Finishing Nailer 1" - 2"	448	309
SN325	Nailer 1-7/8" - 3-1/4"	665	419
SLP20	New Pinner w/cse 5/8 -1-5/8"	399	278
SKS	Stapler 5/8" - 1-1/2"	390	275
SN70	Fram. Nailer Clip Hd 2"-3-1/2"	690	479
SN60	Fram. Nailer-Full Hd 2"-3-1/2"	638	449
SFN40	NEW Finish Nailer 1-1/4 - 2-1/2	571	389

BOSTITCH AIR NAILERS

N80S-1	Stick Nailer	Super Sale	348
RN45	Coil Roof Nailer 3/4 - 1-3/4	845	395
N60FN-2	Finishing Nailer	650	335
BT35-2	Brad Tacker 5/8" - 1-3/8"	275	159
BT35-2K	BT35-2 w/ case, oil, & brads	299	169
CWC100	1 HP Pancake Compressor	463	289
MIIIFS	Flooring Stapler 15 gauge	931	529
S32SX-1	Finish Stapler - 1/2" - 1-3/8"	275	159
S32SX-1K	S32SX-2 with case & oil	269	169
PC5000-1	NEW Power Crown Stapler	300	159

SKIL SIZZLERS

2735-04	12 volt cordless Drill Kit	249	144
2736-04	2735-04 with keyless chuck	269	148
1605-02	Biscuit Joiner w/case	221	135
3400	10" Table Saw - Bench Top	270	169
77	Famous 7-1/4" Worm Drive Saw	Sale	144
77M	NEW 77 Mag Worm Saw - 2 lbs lighter than Model 77	Sale	159

PANASONIC CORDLESS

EY6205EQK	Same as EY6205BC but comes with Ironman battery	368	195
EY6207BC	NEW 12 volt 1/2" Drill w/keyless chuck var. speed w/15 min. charger & case	420	222
EY6282EQK	Var. spd 9.6 volt Drill with 15 min. charger, case & NEW Ironman battery	315	169
EY62821DKW	9.6 volt Drill Kit w/2 batt.	395	162

NEW PREDATOR DRILLS

EY6181CRKW	NEW 9.6V Compact Drill Kit w/2 batt - 10% more pwr than EY62821DKW	305	165
EY6100CRKW	NEW 12 volt Drill Kit with 2 batteries, 1 hour charger, & case	358	188
EY6100CQKW	Same as EY6100CRKW but has 15 minute charger	420	198
EY6100EQK	NEW 12 volt Drill kit with NEW Ironman battery, 15 min. charger, & cse	375	199
EY6100EQKW	Same as EY6100EQK but w/2 Ironman batteries	473	198

PASLODE IMPULSE GUNS

IM250	Trimpulse Finish Nailer Kit	849	548
IM325	Impulse Framing Nailer Kit	849	548

WAGNER PAINT & SPRAYER PRODUCTS

230HD	Power Painter/Sprayer	100	95
255	Airless Kit	180	135
375E	Airless System	195	164
505	High performance Airless Painter	440	369
HVLP	Fine coat finishing HVLP System	195	155
CS2000P	Pro fine finish HVLP System	339	278

Airy Air Nailers

0241SK
Brad Nailer 3/8"-1 9/16"
Same as Senco SLP-20
List 180 Sale 98

0250SK
Brad Nailer 3/4"-2"
List 296 Sale 164

0626SK
1/4" Crown Stapler 3/8"-1"
List 194 Sale 104

0635SK
1/4" Crown Stapler 1/2"-1-3/8"
Same as Senco SKS
List 310 Sale 175

EZ-1
New Multi-purpose nailer & stapler
List 180 Sale 98

Above Nailers come w/case, fasteners, oil & wrenches

0565T
Angle Finish Nailer 1"-2-1/2"
List 386 Sale 205

DELTA #34-080 10" MITRE BOX XTRA SPECIAL 194.00

DEWALT TOOLS

Model	Description	List	Sale
DW364	7-1/4" Circ. Saw w/brake	285	158
DW945K-2	12V cdls Drill Kit w/2 batt	309	179
DW944K-2	9.6V cdls Drill Kit w/2 batt	283	165
DW610	1-1/2 HP 2 handle Router	274	149
DW411	1/4 sheet Palm Sander	97	58
DW100	3/8" Drill, 4 amp,0-2500 rpm	118	68
DW682K	Biscuit Joiner with case	429	219
DW705	12" Compound Mitre Saw	706	359
DW625	3 HP var. spd PlungeRouter	Sale	275
	DW625 Router comes with FREE DW6966 Fine Depth Adjuster!		
DW930K	NEW 12V 5-3/8" Trim Saw Kit	370	199
DW935K	NEW 14.4V 5-3/8" Trim Saw Kit	444	237
	DW935K comes with FREE DW9091 battery!		
DW675K	3-1/8" Planer with case	289	164
DW431	3 x 21 v/spd Belt Sander	331	184
DW421	5" Palm Random Orbit Sander	125	74
DW444	6" Ran Orb Sander-PSA pad	266	139
DW443	DW444 w/hook & loop pad	266	139
DW673K	NEW Laminate Trimmer Kit	364	215
	DEWALT CORDLESS DRILLS		
DW952K	3/8" v/spd w/two 9.6V batt	280	145
DW953K	3/8" v/spd w/one 12V batt	306	175
DW962K-2	3/8"v/sp w/two 9.6V XR batt	324	179
DW972K-2	3/8"v/sp w/two 12V XR batt	352	189
	above drill comes with FREE bit set!		
DW991K	3/8"v/sp w/one 14.4V XRbatt	370	199
DW991K-2	above drill w/ 2 batteries	Sale	225
	Above drill kits come w/ charger & steel case!		

HITACHI TOOLS

C8FB	8-1/2" Slide Compound Saw	400	575
C10FS	10" Slide Compound Saw	595	745
P12R	12-9/32" Planer	470	795
P12RA	Planer/Jointer	940	995
G12SA	4-1/2" Grinder 6.9 amp	160	89
NR83A	Fram Nailer 2 - 3-1/2 Full Head	700	409
NR83AA	Framing Nailer 2 - 3-1/2	750	425
NT65A	16 ga. Brad Nailer 1 - 2-1/2	610	339
NV45AB	Coil Roofing Nailer 7/8 - 1-3/4	750	435

BIESEMEYER FENCES

B-50	50" Commer. Saw Fence	345	298
T-SQUARE 52	52" Homeshop Fence	279	238
T-SQUARE 40	40" Homeshop Fence	259	208
T-SQUARE 28	28" Homeshop Fence	249	198

JORGENSEN ADJUSTABLE HANDSCREWS

Item#	Jaw Length	Open Cap	List	Sale	Box of 6
#0	8"	4-1/2"	19.76	11.75	58.00
#1	10"	6"	22.63	12.50	68.00
#2	12"	8-1/2"	25.95	14.50	78.00

PONY CLAMP FIXTURES

Model		List	Sale	Lots of 12
50	3/4" Black Pipe Clamps	14.87	7.80	88.95
52	1/2" Black Pipe Clamps	12.40	6.70	71.50

BOSCH

Model	Description	List	Sale
1587VS	NEW Top Hand "CLIC" Jig Saw	292	149
1584VS	NEW Barrel "CLIC" Jig Saw	285	149
	Bosch Metal Case for above Jig Saws	34	32
	Bosch 30 blade assortment for Jig Saws		26.99
	1584VS or 1587VS with steel case and 30 Bosch blades	Sale	189
1272D	3" x 24" Belt Sander with bag.	375	209
1273D	4" x 24" Belt Sander with bag.	380	218
1347AK	4-1/2" Grinder w/cs & access.	185	109
1194VSR	1/2" var. speed Hammer Drill	282	155
1194VSRK	above Hammer Drill w/case.	313	169
1609K	Lam Installers Kit with 1609	343	189
1609KX	Deluxe Installers kit	405	234
1604A	1-3/4 HP 2 Handle Router	250	142
1604AK	same as above w/cse & acc.	318	185
1606A	1-3/4 HP D-handle Router	295	179
3270DVS	3 x 21v/spd belt sander w/ bag	270	165
1273DVS	var. spd 4" x 24" Belt Sander	415	228
1614EVS	1-1/4HP v/spd Plge Router	283	159
1613EVS	2HP v/sp Plunge Router	359	199
1615EVS	3 HP v/spd Plge Router	505	289
1632VSRK	Recip Saw 8.4A orb-v/spd	225	159
3050VSRK	9.6V cdls v/sp Drill Kit comp	288	149
3051VSRK	3050VSRK w/keyless chuck	299	149
3054VSRK	12V Drill Kit w/ 2 batteries	330	185
3300K	NEW 12V Drill Kit w/ 2 batt	348	189
3310K	NEW 12V T-handle Drill Kit	348	189
3110K	NEW 9.6V T-handle Drill Kit	320	185
3283DVS	5" Random Orbit Sander	199	98
3283DVSK	3283DVS Kit complete	199	118
3725DVS	NEW 5" Random Orbit Sander	258	149
3727DVS	NEW 6" Random Orbit Sander	268	154
B1650K	NEW Biscuit Joiner	289	159
B7000	NEW Corner Detail Sander	122	68
B7001	B7000 w/ variable speed	156	95
B4050	NEW In Line Jig Saw	199	115
11230EVS	NEW SDS-max 1-1/2" Rtry Hmr	885	525
11231EVS	NEW SDS-max 1-3/4" Rotary Hammer	1336	809
11223EVS	NEW SDS-max 2" Rotary Hmr	1548	929

AEG POWER TOOLS

Model	Description	List	Sale
TXE150	6" var/spd Ran Orb Sander	304	139
HBSE75S	3"x21" var/spd Belt Sander	309	179
BSPE100X	Top Handle Jig Saw w/case	286	164
FSPE100X	Barrel Grip Jig Saw w/case	274	164

PORTA NAILER

401	Porta Nailer complete	265	205
501	Face Nailer complete	265	205

BLACK & DECKER

2694	7-1/4" Super Sawcat w/case	285	158
2695	8-1/4" Super Sawcat w/case	328	179

DAVID WHITE

LP6-20	Sight Level package - 20x	310	205
LP6-20XL	LP6-20 w/9056 tripod & 7620 rod		265
LT8-300	Level Transit - 26x	695	439
LT8-300P	above Level w/optical plum	821	518
LT6-900	Level Transit - 20x	389	254
ALT8-900	Automatic Level - Transit -18x	638	395
ALTP6-900	above Level w/tripod & rod	708	495
ALP6-18HD	above Level w/tripod & rod	570	365
ML100I	NEW Laser Level	1099	945
ML100	NEW Laser Level w/detector	1249	1075

RYOBI SPECIALS

RE600	3 HP Plunge Router	500	228
BE321	3" x 21" var. spd Belt Sander	310	148
TFD222VRK	12V cordless Drill Kit	365	149
BT3000	10" Table Saw with stand	1125	529
AP12	12" Bench Planer	884	395
BS900	9" Bench Band Saw	340	165
OSS450	Oscillating Spindle Sander	340	159
DC500	NEW Detail Carver	120	64
TSS200	NEW 8-1/2" Slide Comp. Saw	895	399

SIOUX TOOLS

8030	New 3/8" var/spd Drill	250	145
8000	3/8" var/spd close qtr Drill	201	125
690	5" Air Random Orbit Sander	139	132
Msx636 FEIN	Triangle Sander Kit	Sale	199
Msx625 FEIN	New Air Triangle Sander	Sale	189
Lamello	New Cordless Biscuit Joiner	695	549
LPN672 PONY	Air Palm Nailer w/glove	Sale	94.99
RTM01 ROTOZIP	Drywall cut out unit		68.95

QUAL-CRAFT PRODUCTS

2200	Pump Jack	79	58
2201	Pump Jack Brace	30	20
2203	Pump Jack guard rail holder	31	21
2204	Workbench & rail holder combo	53	39
	Buy any 6 (can be assort.) deduct 10%		
2601	Wall Jack	167	108
	Lots of 4 deduct additional 10%		

PORTER CABLE

444	Profile Sander	157	94
9444	Profile Sander Kit	205	119
7499	Ultimate Cut-out tool	113	69
690	1-1/2 HP Router 8 amp	260	138
691	1-1/2 HP Router D-handle	285	155
693	1-1/2 HP Plunge Router Base	320	174
6931	Plunge Router Base	125	79
695	1-1/2 HP Router/Shaper	400	229
696	Heavy Duty Shaper Table	230	135
351	3" x 21" Belt Sander w/o bag	280	158
352	3" x 21" Belt Sander with bag	290	165
352VS	3x21 Belt Sander w/bag v/spd	305	169
360	3" x 24" Belt Sander with bag	365	198
361	3" x 24" Belt Sander w/o bag	345	194
362	4" x 24" Belt Sander with bag	380	205
97751	1/2" v/spd Hammer Drill w/cse	270	155
9118	Porta Plane Kit 7 amp	390	218
505	1/2 sheet Pad Sander	230	128
7549	Top handle Jig Saw 4.8 amp	270	129
330	Speed Block Sander 1/4 sheet	110	62
556	Biscuit joiner w/5556 lift fence	Sale	139
345	6" Saw Boss 9 amp	190	109
9345	345 comp. w/cse & carb blde	220	128
9647	TIGER CUB Recip. Saw	210	119
9637	Full var/spd Recip Saw 8 amp	270	148
7519	3-1/4 HP Router 2 Handle	445	239
7518	3-1/4 HP 5 speed Router	510	275
7538	3-1/4 HP Plunge Router	445	242
7539	3-1/4HP v/spd Plunge Router	510	269
7399	5.6 amp Drywall Cutout Unit	140	84
7310	5.6 amp Laminate Trimmer	165	95
97310	Laminate Trimmer Kit comp	360	198
7335	5" Rndm Orbit Sndr w/ case	245	135
97355	7335 w/ case & dust pick-up	274	138
7336	6" Rndm Orbit Sander w/ case	250	139
97366	7336 w/ case & dust pick-up	284	144
73333	Dust Collection system	31	24.50
9853	12V 3/8" Drill Kit	280	154
9855	12V 1/2" 2 spd,v/sp Drill Kit	335	178
8500	12V battery for above drills	Sale	45
332	Palm Grip Rndm Orbit Sander	120	69
333	above Sander with dust bag	135	75
334	333 Sander with PSA pad	135	74
340	1/4 Sheet Orb Sndr w/dust p/u	89	55
550	Pocket cutter with case	330	179
7700	10" "Lazerloc" Mitre Saw	634	345
310	Production Laminate Trimmer	250	145
347	7-1/4" "Framers" Circ Saw	225	129
347K	347 Saw w/ plastic case	250	134
743	347 Saw - left hand version	225	129
743K	743 Saw w/ plastic case	250	134
9743	743 Saw with case	255	139
447	347 Saw with brake	225	134
843	447 Saw-left hand version	245	139
7800	Drywall Sander	585	329
7810	Wet/Dry Vac for above sander	455	259
9737	New Tiger Recipro Saw	290	165

FREE FREIGHT TO THE CONTINENTAL STATES ON EVERY ITEM • GIFT CERTIFICATES NOW AVAILABLE

FINISHING TOUCHES

Canadian clockmaker doubly inspired

Bob Clements of Kitchener, Ontario, always wanted to build a clock from scratch. But not until he retired did he have time.

"In 1991, Dad commented that he wanted to build grandfather clocks for my brother and me," wrote Joan Pulsifer, Bob's married daughter. "We both liked the clock on the cover of the April 1988 issue of *WOOD*® magazine. So, he said he'd build one for each of us, but it would take three years."

In the summer of 1993, though, Bob asked his son and daughter to select their stain colors. "We chose them, then didn't think too much more," Joan continued, "until Christmas Day when Dad completely surprised us with the finished clocks!"

Bob reports that he changed the face of the clock at right in the photo, and made some component modifications, but he thinks they are fine as published. Great woodworking job, Bob!

As a Christmas surprise for his son and daughter, Canadian reader Bob Clements built each a tall clock from plans in *WOOD* magazine.

Timber tome for the birds

One of the nation's largest hardwood producers, the Anderson-Tully Company, offers its help in improving songbird habitat. The Memphis-based firm has produced the *Breeding Bird Field Manual*, a 155-page color-illustrated guide to the habitats of 75 migratory songbirds found in the Mississippi Valley. Intended to assist forest managers and bird lovers, the guide includes a cassette tape of bird songs.

In a 1992 interview ("Logging Along the Mighty Mississippi," *WOOD* magazine, February 1992) Anderson-Tully's wildlife biologist Mike Staten explained how environmentally conscious forest management encourages songbirds: "Our forests always have a mixture of treetop levels, hollow trees for nesting, and wildlife food. Mulberry and dogwood contribute to the diversity. We look at birds and other wildlife as enriching our forest stands." Anderson-Tully lands stretch from Illinois to Louisiana. For a copy of the book and tape, send $43 (ppd., U.S.) to: Anderson-Tully Co. Bird Book, P. O. Box 28, Memphis, TN 38101.

On display: Four centuries of Norwegian folk art

Norwegians have always had a way with wood. That's evident in the major exhibition at New York's Museum of American Folk Art, "Norwegian Folk Art: The Migration of a Tradition."

Jointly organized by the Norwegian Folk Museum, Oslo, and the Museum of American Folk Art, the show chronicles the development of Norwegian folk art and its continuation in the United states through more than 175 outstanding works. Among the many wooden items on display, you'll see Viking drinking vessels, decorated trunks, carved furniture, and pieces from contemporary folk carvers, such as Decorah, Iowa's Harvey Refsal, a carving consultant to *WOOD* magazine (see photo *below*). The exhibition runs through January 7, 1996, then moves on to Bismark, North Dakota, St. Paul, Minnesota, Seattle, Washington, and Oslo, Norway. For a complete exhibition schedule, call 212/977-7170.

Harley Refsal's carving "Bringing in the firewood" depicts the rough-hewn individuals and way of life he remembers from growing up in a Norwegian community in Minnesota.

Who ships wood to the U.S.?

According to statistics published by the Western Wood Products Association, softwood-lumber imports to the United States in 1994 totaled 16.4 billion board feet, up 7.3% over the previous year. (Total softwood consumption was about 195 billion board feet.) Canada led the exporters filling the void that timber producers associate with the reduction in logging on national forests in the Pacific Northwest. Canadian sawmills shipped 62.5% of their lumber south. Four countries supplied about 90% of the United States' non-Canadian lumber imports: Brazil, Chile, New Zealand, and Mexico.

Photographs: Joan Pulsifer; Jim Elder
Illustrations: Jim Stevenson

Print this article

WITH A FREE MOBILE BASE, IT'S EASY TO ROLL DELTA QUALITY INTO YOUR SHOP.

FREE Get a free mobile base when you buy this 14" Band Saw with open stand. Cuts stock up to 6¼" thick and 14" wide. Contour, straight cut, resaw and roll.

FREE Buy the Contractor Saw with a 30" Unifence and we'll put it on wheels for free. With a free mobile base for both the saw and the Unifence extension, you'll be rolling first class.

FREE 14" Band Saw with enclosed stand comes with a free mobile base, plus a free 18" fence. The ultimate deal on wheels.

FREE Free mobile bases plus free knife-setting jigs make our DJ-20 8" and DJ-15 6" Precision Jointers as manageable as they are accurate.

SELECT TOOLS

DEALS ON WHEELS

LIMITED TIME

We all love those Delta machines. But sooner or later, something's got to give. There's only so much shop space before we hit our limit.

Now here's an idea that just might move you. For a short time only, we're making it easier than ever to roll one of these beauties into your shop and park it anywhere you want.

Just buy any one of the five machines pictured here, and we'll let you slip a hefty mobile base underneath it for free. A genuine Delta Accessory that makes these valuable machines even better. So you'll be able to rearrange your space on a daily basis, if you want. Or move one machine to work in closer proximity to a companion piece. Effortlessly. (Who knows, you might even have room for *two* new machines.)

We're rolling out our *Deals On Wheels* promotion for a limited time only. And *only* at participating Delta dealers. And if you look closer you'll notice that several of these tools even have an extra goody to make an already great value even greater.

If you're ready to roll Delta Quality into your shop, call for the name of your nearest participating dealer. Delta International Machinery Corp., 800-438-2486. In Canada, 519-836-2840.

THE POWER OF THE PROS

DELTA

WOODWORKING MACHINERY

A Pentair Company

Delta funds these national PBS programs.

The New Yankee Workshop with Norm Abram.

The American Woodshop with Scott Phillips.

First we changed the rules. Then we stretched them.

Dodge Ram Club Cab lets you do something you thought you'd never do in the back seat of a pickup. Relax. Since there's more hip room than other club cabs, back seat passengers can spread out. The seat cushion is deeper, providing added support for longer trips. And when we say that our pickup is the most comfortable full-size club cab you can buy, we have the material to support it. In the form of a patented fabric, with fibers that act as a shock absorber. It's like having a suspension system just for the back seat.

It's easy to climb in and out, too. Because both sides of the 40/20/40 front bench tip and slide forward. Safety doesn't take a back seat, either. A driver's airbag comes standard.[1] And we've made available four-wheel anti-lock brakes.

You've got plenty of power, courtesy of Dodge Magnum® engines–overall the most powerful line of truck engines on the planet. And you've got some powerful assurance down the road, as well. Dodge Ram has better resale value than Ford, Chevy or GMC.[2]

Sit back and make yourself comfortable. Front or back, you'll find that we've made plenty of room. For still more information, call 1-800-4-A-DODGE.

America's Truck Stop

The New Dodge
A DIVISION OF THE CHRYSLER CORPORATION

1 Always wear your seat belt for a fully effective airbag. 2 We calculated resale using avg. trade-in values of '94 full-size models vs. MSRPs. published in Jan.-July '95 *N.A.D.A. Official Used Car Guide*® monthly editions. Use of these values does not constitute NADA's endorsement.

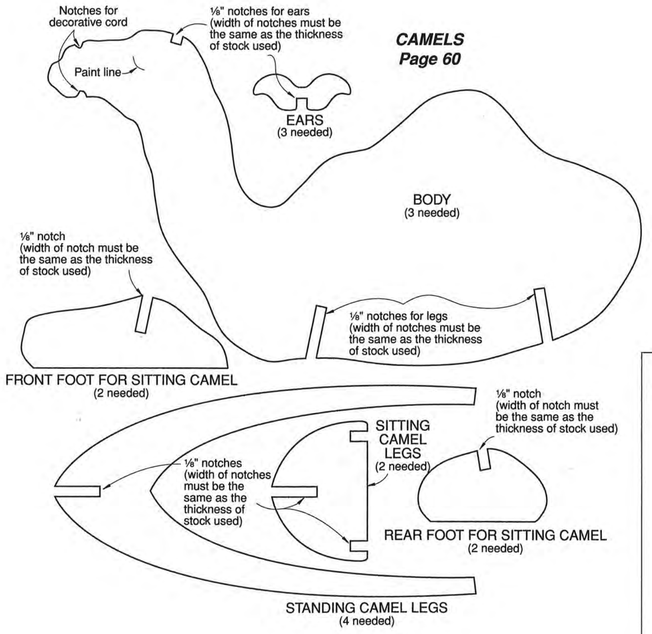
Notches for decorative cord
⅛" notches for ears (width of notches must be the same as the thickness of stock used)
Paint line
EARS (3 needed)
BODY (3 needed)
⅛" notch (width of notch must be the same as the thickness of stock used)
⅛" notches for legs (width of notches must be the same as the thickness of stock used)
FRONT FOOT FOR SITTING CAMEL (2 needed)
⅛" notch (width of notch must be the same as the thickness of stock used)
SITTING CAMEL LEGS (2 needed)
⅛" notches (width of notches must be the same as the thickness of stock used)
REAR FOOT FOR SITTING CAMEL (2 needed)
STANDING CAMEL LEGS (4 needed)

CAMELS
Page 60

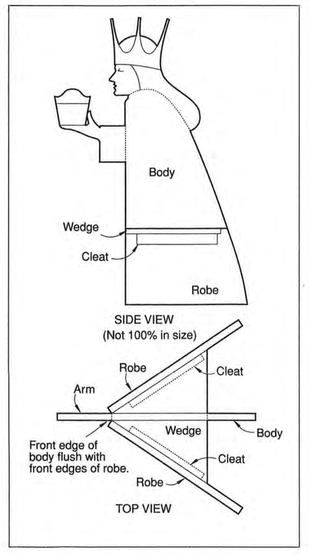

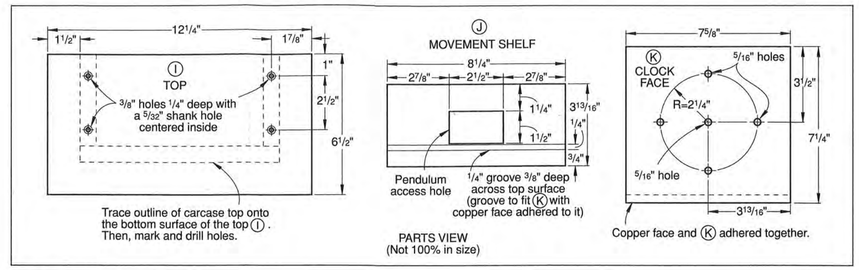

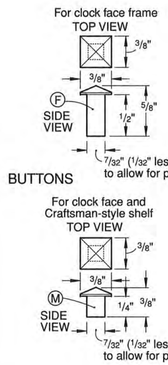

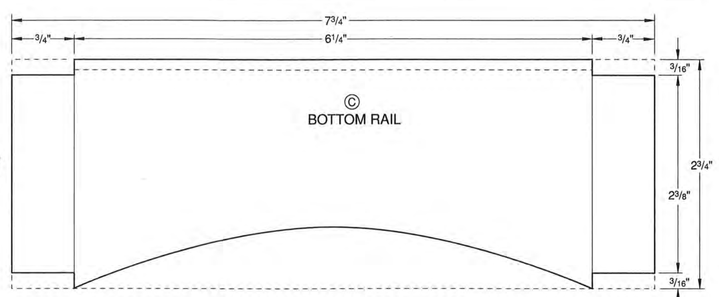

COPPER-TOPPED CLOCK
Page 62

FULL-SIZED PATTERNS

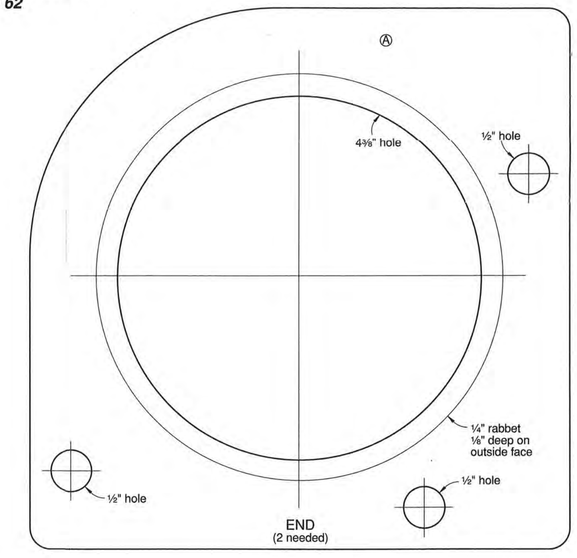

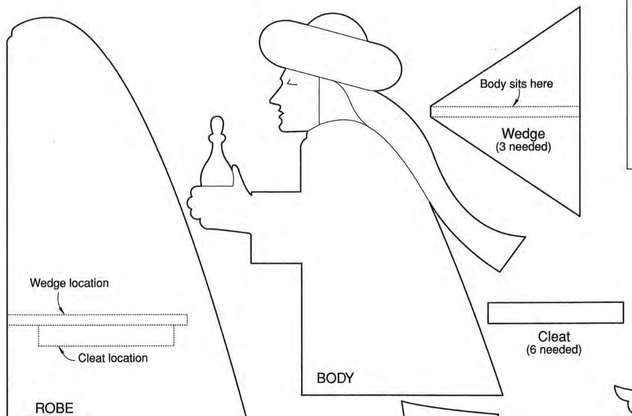

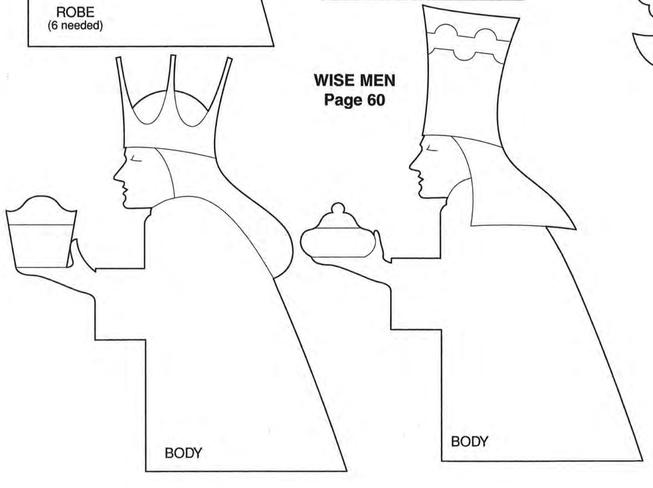

WISE MEN
Page 60

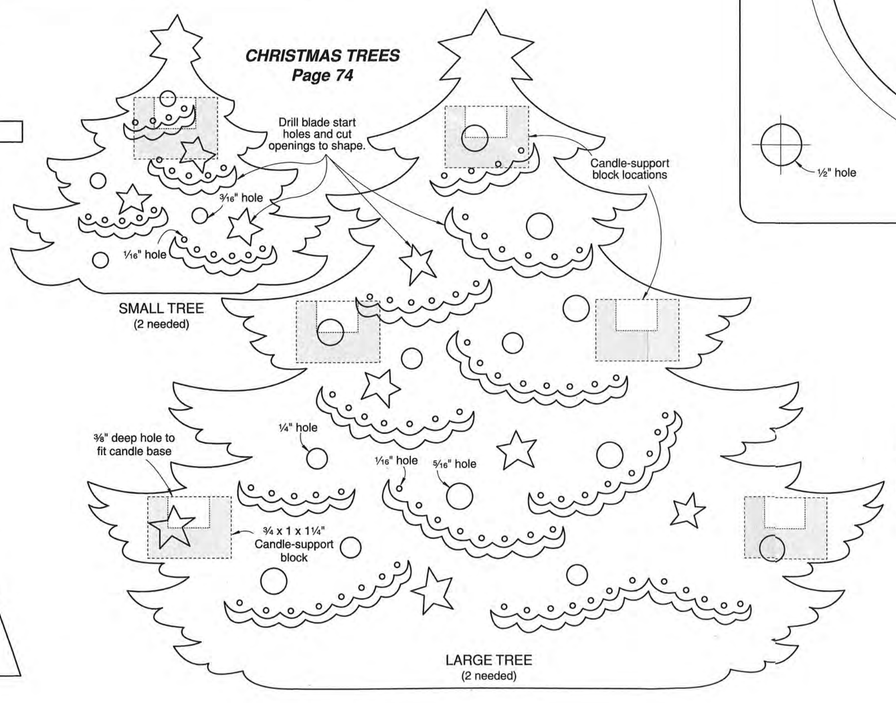
Drill blade start holes and cut openings to shape.
Candle-support block locations
⅜" hole
1/16" hole
SMALL TREE (2 needed)
¼" hole
⅜" deep hole to fit candle base
1/16" hole
5/16" hole
¾ x 1 x 1¼" Candle-support block
LARGE TREE (2 needed)

CHRISTMAS TREES
Page 74

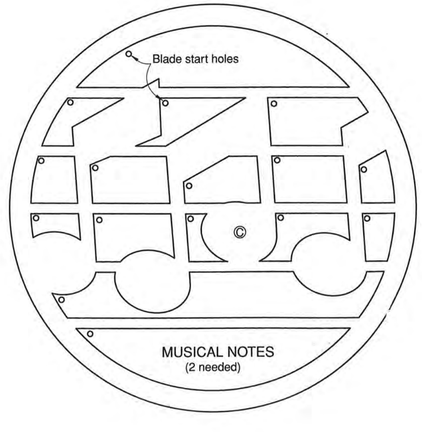

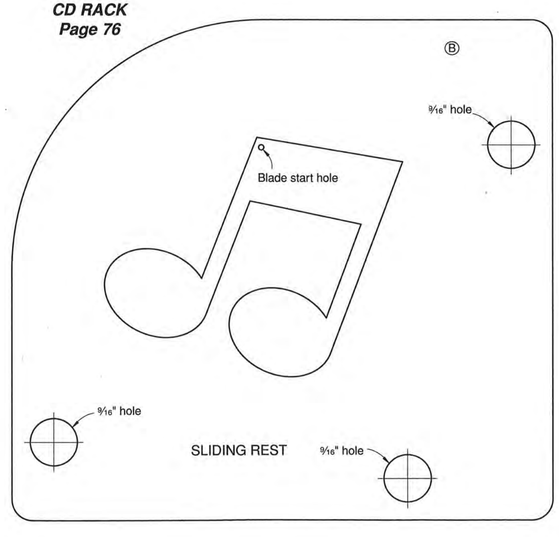

CD RACK
Page 76

Better Homes and Gardens®

WOOD® PATTERNS™

Full-sized for your woodworking convenience

DECEMBER 1995 **ISSUE 84**

Dear Reader: As a service to you, we've included full-sized patterns on this insert for irregular-shaped and intricate project parts. You can machine all other project parts using the Bill of Materials and the drawings accompanying the project you're building.

- Hold-down jig
- Camels/wisemen
- Copper-topped clock
- Toy boat
- Potpourri box
- Christmas trees
- CD rack
- Skiing troll
- Wall shelf

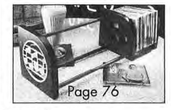

© Copyright Meredith Corporation, 1995. All rights reserved. Printed in the U.S.A.

FULL-SIZED PATTERNS

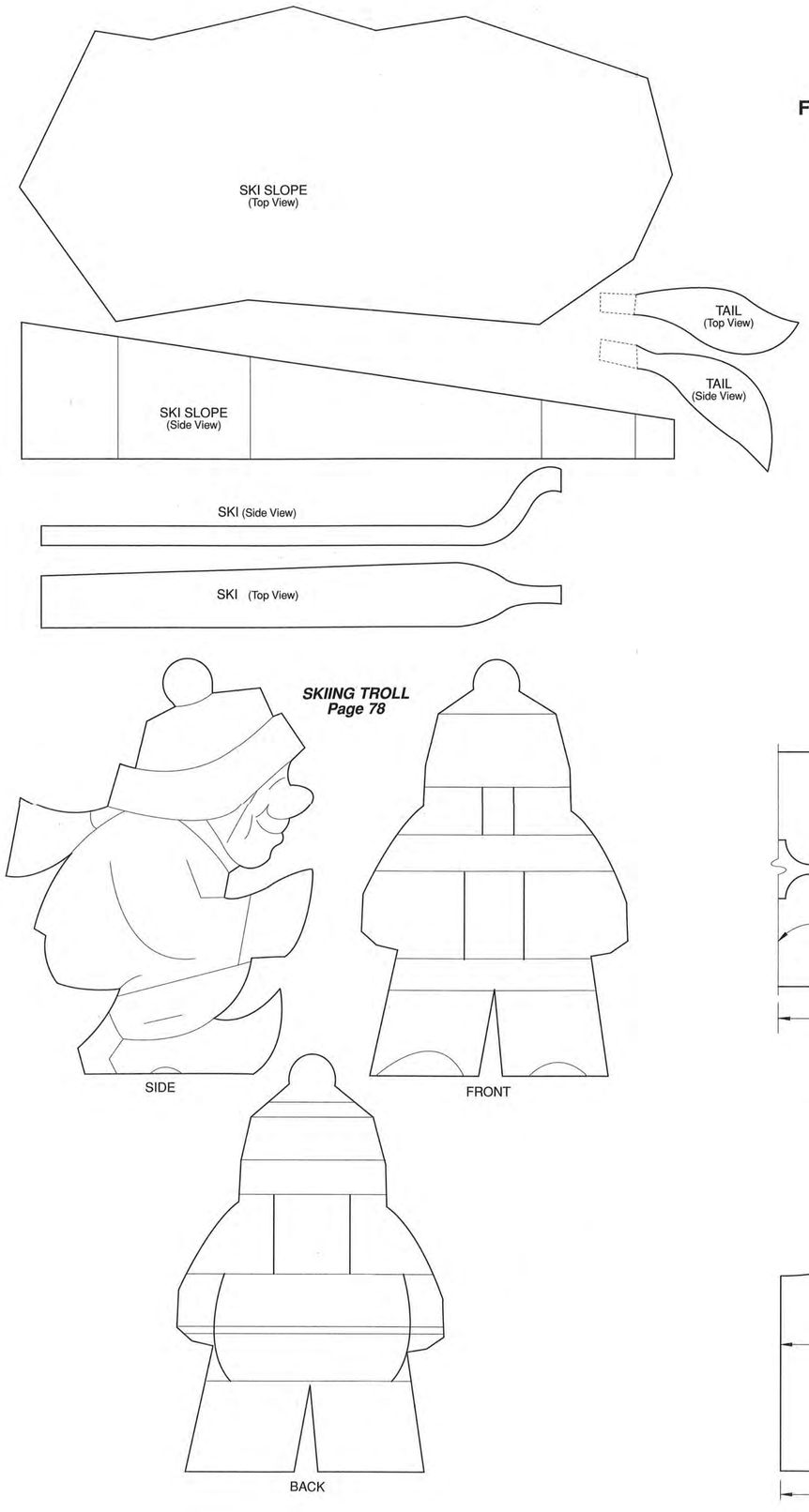

SKIING TROLL
Page 78

TOY BOAT
Page 70

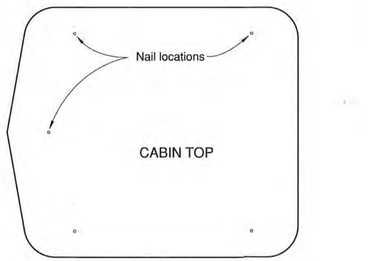

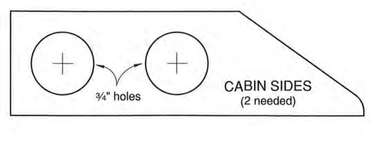

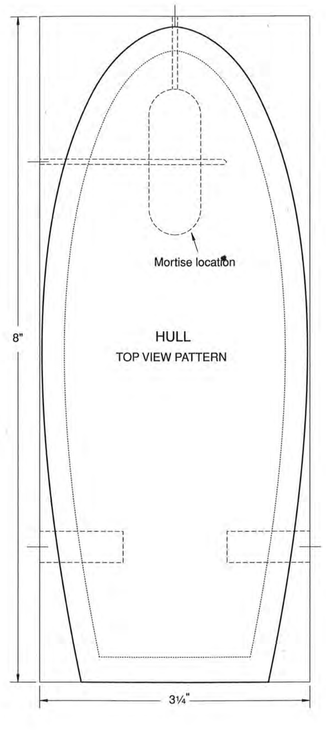

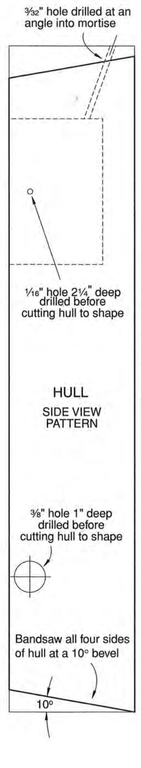
3⁄32" hole drilled at an angle into mortise
1⁄16" hole 2¼" deep drilled before cutting hull to shape
HULL
SIDE VIEW PATTERN
⅜" hole 1" deep drilled before cutting hull to shape
Bandsaw all four sides of hull at a 10° bevel
10°

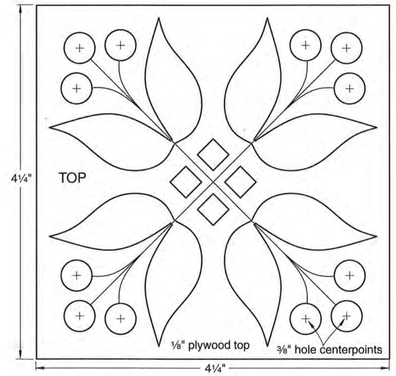

POTPOURRI BOX
Page 72

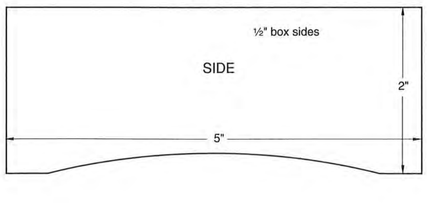

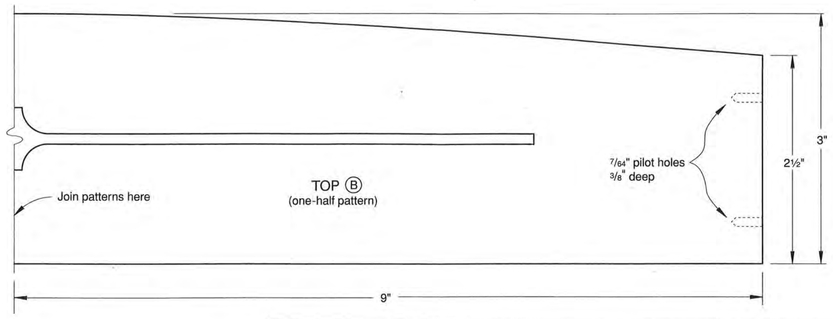

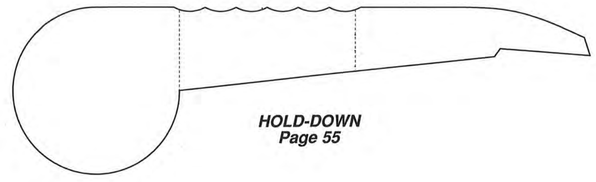

HOLD-DOWN
Page 55
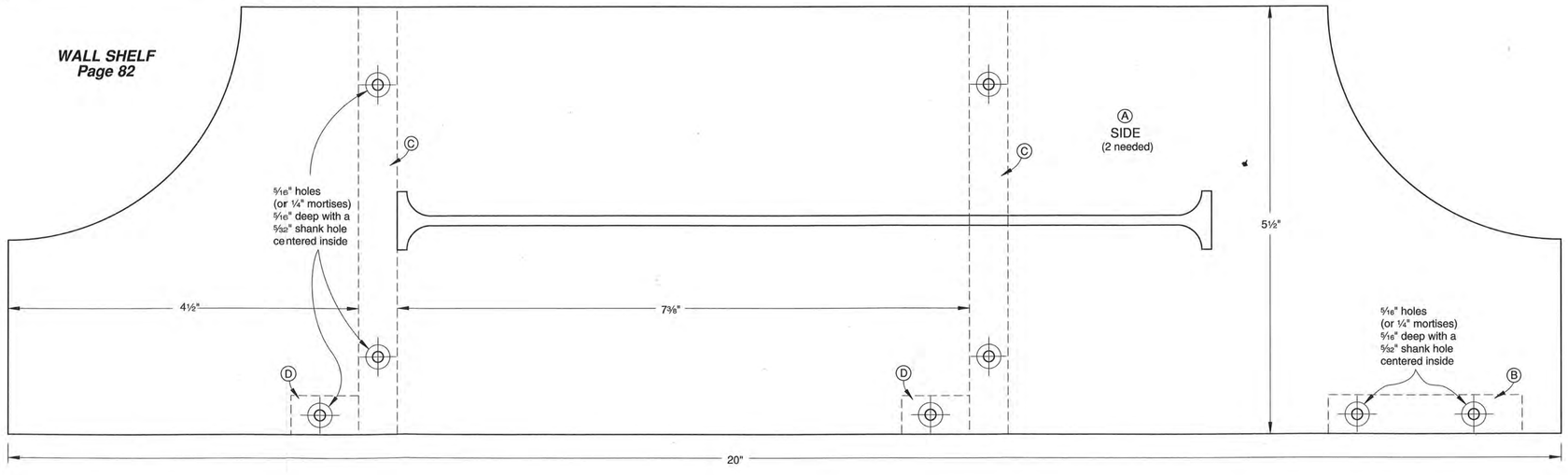
WALL SHELF
Page 82